Unictron
Technologies Corp.

Piezoceramics & Ultrasonic transducers

Product Catalog

Sensing and Connecting

V.11302

Table of Contents

About us

Unictron Technologies Corporation: Pioneering Excellence in Piezoceramics

Welcome to Unictron Technologies Corporation, the forefront of the piezoceramic industry. Established in 1988, we've become Taiwan's largest and most esteemed piezo manufacturer, serving satisfied customers across six continents.

Our commitment to unparalleled quality is exemplified by our adherence to RoHS, REACH, and ISO 14001 standards. With TS 16494 certification, we attest our competence in the automotive sector. Our expert team, backed by years of experience, specializes in tailoring solutions for diverse ultrasonic applications. From pioneering piezoceramics to intricate transducers, our capabilities traverse the spectrum, showcasing our dynamic competence.

By choosing Unictron, you're embracing a legacy of excellence that's continuously shaping the landscape of piezoceramics. Here, we offer a glimpse into the vast possibilities of Unictron – a world where innovation, quality, and customer-centricity converge. The future of piezoceramics is here - a realm we're pioneering.

Certificates

Pioneering Quality: Upholding the Highest Standards

Our commitment to delivering unparalleled quality is exemplified by the stringent standards we uphold. We don't merely follow standards; we set them. Adhering to RoHS and REACH regulations is a non-negotiable aspect of our operations. Additionally, we proudly hold the ISO 14001 certification for Hazardous Substances Management, underlining our dedication to ethical and environmentally responsible manufacturing practices. Our TS 16494 certification further attests our competence in the automotive sector.

Certificate of Registration

This certificate has been awarded to

Unictron Technologies Corporation

4F & 5F, No. 83, Kewang Rd., Longtan Dist., Taoyuan City, 32556, Taiwan (R.O.C.)

In recognition of the organization's Quality Management System which complies with

ISO 9001:2015

The scope of activities covered by this certificate is defined below

Design and Manufacture of Antennas, Antenna Modules, Electronic Ceramics and Electrical System.

Certificate Number 66482/D/0001/UK/en

Date of Issue of Certification Cycle	Issue Number	Certificate Expiry Date	Certification Cycle
16 February 2022	1	15 February 2025	1
Revision Date	Revision Number	Original Certificate Issue Date	Scheme Number
15 February 2023	1	14 February 2022	n/a

For detailed explanation for the data fields above, refer to http://www.urs-holdings.com/logos-and-regulations

Issued by

Mukesh Singhal - On behalf of the Schemes Manager

ISO 9001:2015
(Taoyuan Factory)

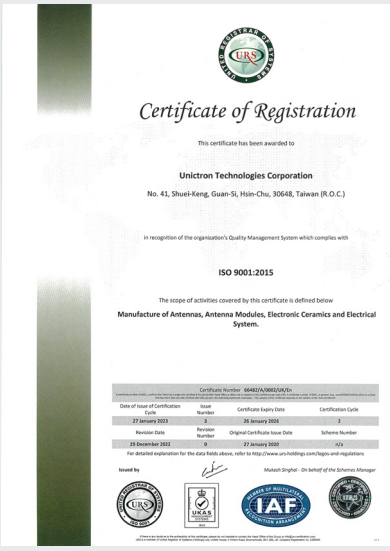

Certificate of Registration

This certificate has been awarded to

Unictron Technologies Corporation

No. 41, Shuei-Keng, Guan-Si, Hsin-Chu, 30648, Taiwan (R.O.C.)

In recognition of the organization's Quality Management System which complies with

ISO 9001:2015

The scope of activities covered by this certificate is defined below

Manufacture of Antennas, Antenna Modules, Electronic Ceramics and Electrical System.

Certificate Number 66482/A/0001/UK/en

Date of Issue of Certification Cycle	Issue Number	Certificate Expiry Date	Certification Cycle
27 January 2023	1	26 January 2026	2
Revision Date	Revision Number	Original Certificate Issue Date	Scheme Number
29 December 2022	0	27 January 2020	n/a

For detailed explanation for the data fields above, refer to http://www.urs-holdings.com/logos-and-regulations

Issued by

Mukesh Singhal - On behalf of the Schemes Manager

ISO 9001:2015
(Hsinchu Factory)

CERTIFICATE

The Governing Board of
ARES International Certification Co., Ltd.
Hereby Grants To:

Unictron Technologies Corporation

4/5F., No. 83, Kewang Rd., Longtan Dist., Taoyuan City 325, Taiwan (R.O.C.)
No. 41, Shuei-Keng, Guan-Si, Hsin-Chu, Taiwan (R.O.C.)
11F., No. 2, Sec. 4, Zhongyang Rd. Tucheng Dist., New Taipei City, Taiwan (R.O.C.)

Has been assessed and found to be in accordance with the requirements of standard detailed below

ISO 14001:2015

Scope

Design and manufacturing of antennas, antenna modules, electronic ceramics, GPS, RF, satellite communications, ultrasonic transducers.

Certificate No.: ARES/TW/I2111079E
Certificate Issue Date: 2021-11-20
Registration Expiration Date: 2024-11-19

The time interval between each surveillance audit and the last on-site audit shall not exceed 12 months, and the organization must obtain "surveillance audit approval notification" issued by ARES to ensure the validity of the certificate.

Authorized by :

ARES International Certification Co., Ltd.
No.12-2, Ln. 187, Wenping Rd., Anping Dist., Tainan City 708, Taiwan
TEL / 06-295 9696 (Rep. Line) FAX / 06-295 9667
www.ares-registration.com

ISO 14001:2015

Certificate of Registration

This certificate has been awarded to

Unictron Technologies Corporation

4F & 5F, No. 83, Kewang Rd., Longtan Dist., Taoyuan City, 32556, Taiwan (R.O.C.)

In recognition of the organization's Quality Management System which complies with

IATF 16949:2016

The scope of activities covered by this certificate is defined below

Design and Manufacture of Antennas, Antenna Modules and Electronic Ceramics. - [USI P329CX]

Certificate Number 66482/C/0001/UK/EN

Date of Issue of Certification Cycle	Issue Number	Certificate Expiry Date	Certification Cycle
20 December 2023	2	19 December 2026	2
Revision Date	Revision Number	Original Certificate Issue Date	Scheme Number
20 December 2023	0	24 December 2020	04926115

For detailed explanation for the data fields above, refer to http://www.urs-holdings.com/logos-and-regulations

Issued by

Mukesh Singhal - On behalf of the Schemes Manager

IAFT 16949:2016
(Taoyuan Factory)

Appendix to Certificate

Design and Manufacture of Antennas, Antenna Modules and Electronic Ceramics. - [USI P329CX]

Site No	Type	Address	Scope	USI No
1	Extended Manufacturing Site	Unictron Technologies Corporation No. 41, Shuei-Keng, Guan-Si, Hsin-Chu 30648, Taiwan (R.O.C.)	Manufacture of Antennas, Antenna Modules and Electronic Ceramics	3S5YRH

Certificate Number 66482/C/0001/UK/EN

Date of Issue of Certification Cycle	Issue Number	Certificate Expiry Date	Certification Cycle
20 December 2023	2	19 December 2026	2
Revision Date	Revision Number	Original Certificate Issue Date	Scheme Number
20 December 2023	0	24 December 2020	04926115

For detailed explanation for the data fields above, refer to http://www.urs-holdings.com/logos-and-regulations

Issued by

Mukesh Singhal - On behalf of the Schemes Manager

IAFT 16949:2016
(Hsinchu Factory)

GREAT *Certificate*

Certificate No.: IAS-OHSMS-23-004

This is to certify that the management system of

Unictron Technologies Corporation

Carried out at following site

4-5F., No. 83, Kewang Rd., Longtan Dist., Taoyuan City 325, Taiwan
No. 41, Shuikeng, Guanxi Township, Hsinchu County 306, Taiwan

Has been assessed and found to be in accordance with the requirements of standard detail below

ISO 45001:2018

This certificate is valid for the following scope

Design and manufacturing of antennas, antenna modules, electronic ceramics, GPS, RF, satellite communications, ultrasonic transducers
(IAF Code:19)

Issued Date: APR 12, 2023 Valid Until: APR 11, 2026

David Liu, Managing Director

GREAT International Certification Co., Ltd.
4F., No. 28, Dahua 1st St., Dayuan Dist., Taoyuan City 337002, Taiwan (R.O.C.)
+886-3-275-9668
www.great-cert.com.tw

ISO45001:2018

Core Competence & Manufacturing Capabilities

Facilities That Define Excellence: Where Innovation Resides

As Taiwan's foremost piezoelectric ceramics provider, Unictron offers an diverse array of products and services meticulously tailored to diverse requirements. Over three decades, our engineering teams have mastered material formulation and ceramic processing for exceptional performance. Our products span diverse dimensions, precisely aligned with your specifications. Our advanced manufacturing facilities further amplify this prowess, utilizing dry presses, cold isostatic presses, tape casters, extruders, multilayer equipment, and precision machining tools. Unictron stands as a testament to innovative precision, where formulation excellence underpins our superior manufacturing and customization capabilities.

1

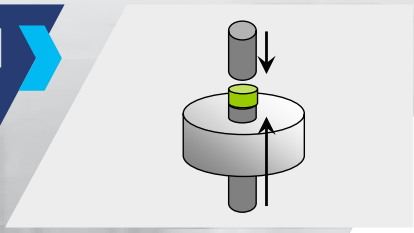

Forming

2

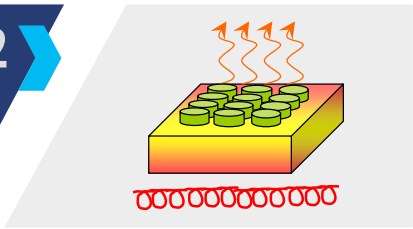

Sintering

3

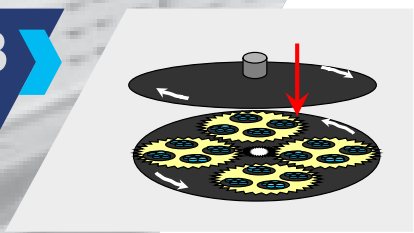

Lapping

4

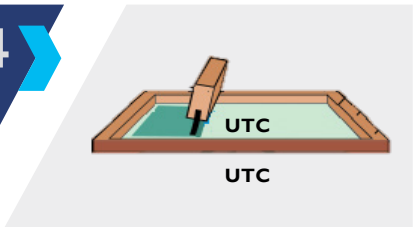

Electrode Printing & Firing

5

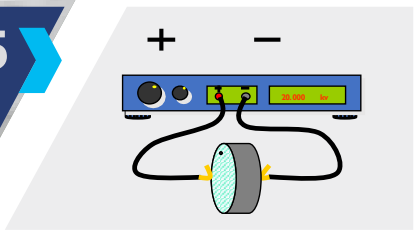

Poling

6

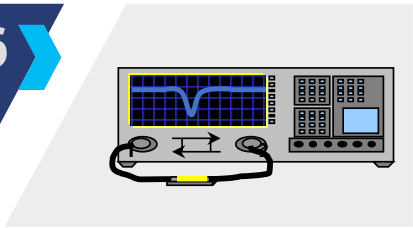

Testing

Piezo Ceramics Material Properties

Material Properties for Hard and Lead Free Piezoelectric Materials

Characteristics	Symbol (unit)	Hard Material Type						
		HPZT-A	HPZT-B	HPZT-C	HPZT-D	HPZT-E	PT-A	BT-A
Relative Dielectric Constant	$\varepsilon_{33}/\varepsilon_0$	1000	1200	1350	1550	1700	200	1200
Dissipation Factor	tanδ (%)	0.6	0.7	0.6	0.5	0.6	1.0	0.8
Electro-mechanical Coupling Factor	k_p (%)	60	58	62	63	62	2	33
	k_{31} (%)	34	33	34	35	36	-	20
	k_{33} (%)	68	67	68	69	71	50	49
	k_t (%)	48	48	46	46	49	53	32
Mechanical Q	Qm	900	800	1300	1600	1600	700	600
Piezoelectric Constant	d_{31} (10^{-12}m/V)	-120	-125	-135	-155	-160	-	-60
	d_{33} (10^{-12}m/V)	250	280	300	340	350	63	150
	g_{31} (10^{-3}V·m/N)	-13.6	-11.8	-11.3	-11.3	-10.6	-	-5.6
	g_{33} (10^{-3}V·m/N)	28.2	26.4	25.1	24.8	23.3	35.6	14.1
Curie Temperature	Tc (°C)	320	310	325	300	310	260	115
Density	ρ (g/cm3)	7.75	7.70	7.65	7.70	7.60	6.70	5.50
Potential Applications		Ultrasonic Generator, Sonar, Machining, Welding, Nebulizer						

Material Properties for Soft Piezoelectric Materials

Characteristics	Symbol (unit)	Soft Material Type							
		SPZT-A	SPZT-B	SPZT-C	SPZT-D	SPZT-E	SPZT-F	SPZT-G	SPZT-H
Relative Dielectric Constant	$\varepsilon_{33}/\varepsilon_0$	1800	2100	2500	3000	4000	4800	5600	3650
Dissipation Factor	tanδ (%)	1.8	2.0	2.0	2.5	2.8	2.8	3.0	2.5
Electro-mechanical Coupling Factor	k_p (%)	60	68	67	68	64	64	61	65
	k_{31} (%)	36	41	42	41	39	39	38	40
	k_{33} (%)	70	68	70	70	71	69	69	71
	k_t (%)	49	50	50	51	49	48	48	50
Mechanical Q	Qm	85	80	80	75	70	60	60	70
Piezoelectric Constant	d_{31} (10^{-12}m/V)	-180	-240	-250	-280	-285	-290	-300	-280
	d_{33} (10^{-12}m/V)	420	490	520	600	650	680	720	630
	g_{31} (10^{-3}V·m/N)	-11.3	-12.9	-11.3	-10.5	-8.0	-6.8	-6.1	-9.0
	g_{33} (10^{-3}V·m/N)	26.4	26.4	23.5	22.6	18.4	16.0	14.5	19.4
Curie Temperature	Tc (°C)	380	350	335	270	235	200	180	245
Density	ρ (g/cm3)	7.75	7.75	7.70	7.60	7.65	7.60	7.60	7.60
Potential Applications		Flow Meter, Distance/Level Sensor, Haptic, Actuator							

* For requests for wafer forms thinner than 0.40 mm, please contact us via p-sales@unictron.com.
**Data represent typical material values. Actual production values may vary ±10% for dielectric properties and ±5% for electromechanical and physical properties.
***Note: PT: Lead titanate, BT: Barium titanate

Shapes and Dimensions of the Piezoelectric Elements

With a cumulative experience of nearly 30 years in the field, our engineering teams are masters of material formulation and ceramic processing technologies. Empowered by state-of-the-art characterization and manufacturing facilities, we excel in crafting products of diverse sizes and shapes tailored to your specific applications.

Disc

	Bulk	Thin Plate
Diameter (mm)	3~90	3~30
Thickness (mm)	0.4~20 (depend on diameter)	0.1~0.4

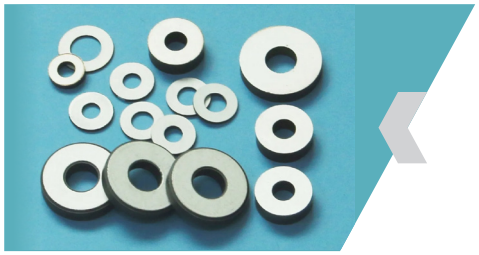

Ring

	Bulk	Thin Plate
Outer Diameter (mm)	10~60	10~30
Inner Diameter (mm)	5~50 (depend on outer diameter)	5~20
Thickness (mm)	0.4~20	0.2~0.4

Rectangle

	Bulk	Thin Plate
Width (mm)	1~90 (depend on length)	5~40
Length (mm)	1~208 (depend on width)	5~40
Thickness (mm)	0.4~20	0.1~0.4

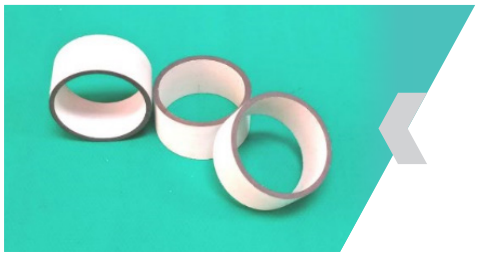

Tube

	Bulk
Outer Diameter (mm)	10~60
Inner Diameter (mm)	5~50 (depend on outer diameter)
Height (mm)	10~25

Arc/Dome/Trapezoid

We offer customization of shapes and dimensions for Arc, Dome, Trapezoid, and more, tailored to your complex requirements

* Electrodes can be provided as a full surface or wrap around (WAE).

Piezo Composites

Piezoelectric composites consist of piezoelectric ceramics, such as PZT, combined with diverse constituents like epoxy resin. This combination synergized ceramics' and polymers' strengths characterized by broad bandwidth, enabling efficacious performance across an extensive frequency spectrum. These composites boast excellent flexibility, processing capabilities, and effective acoustic impedance matching with various media such as water, air, and biological tissues.

Characteristics

- Lower acoustic impedances
- High coupling coefficients
- High bandwidth and lower Qm
- Excellent durability and reliability
- High power
- Tailor-made (Frequency, Electrode, Dimension, and more)

Applications

- High power transducer
- Hydrophone

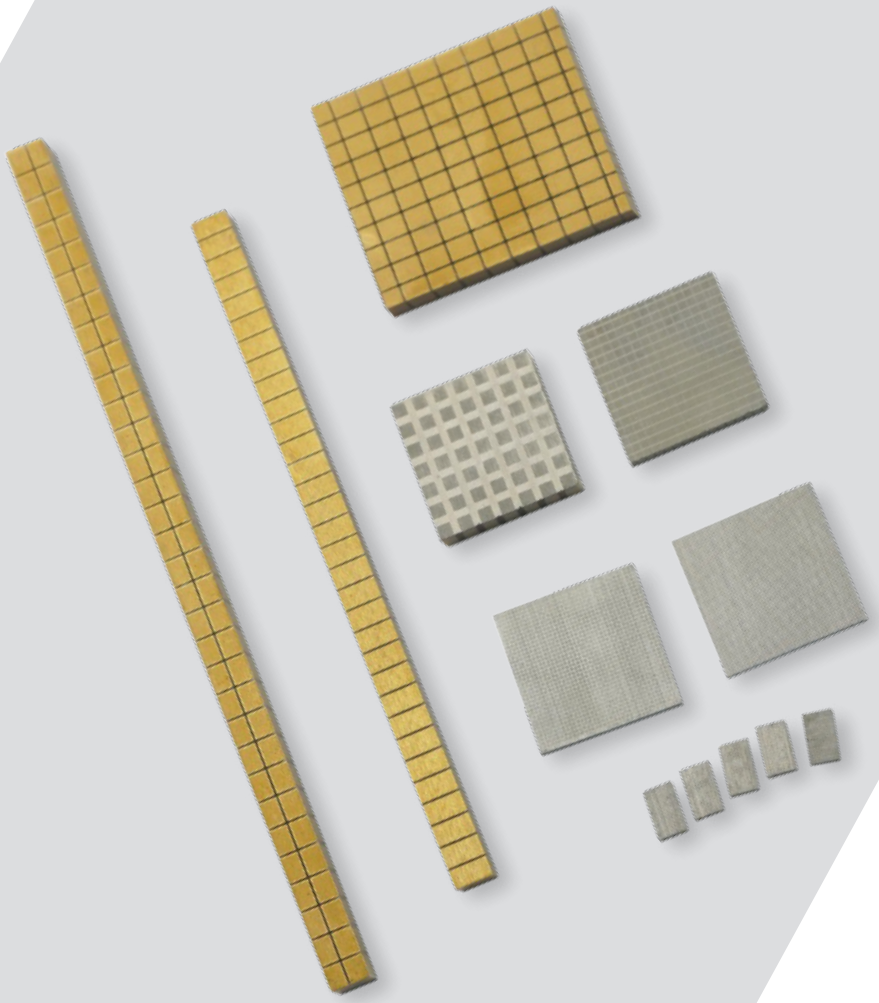

Model: GEY6
P/N: H2KGEY62000500

200kHz 1-3 Composite

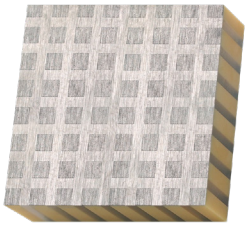

Characteristics

- Lower acoustic impedances
- High coupling coefficients
- High bandwidth and lower Qm
- Excellent durability and reliability

Specifications

Operation Frequency	200	kHz
Capacitance at 1 kHz	600	pF
Impedance at Resonant Frequency	<270	Ω
Bandwidth	>40	kHz
Electro-mechanical Coupling Coefficient (Kt)	>60	%
Maximum Operational Temperature	100	°C

Dimensions

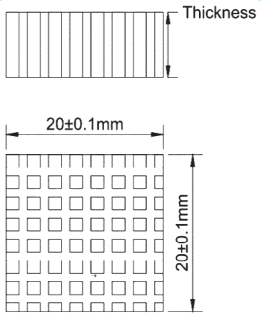

Model: GEY3
P/N: H2KGEY35000500

500kHz 1-3 Composite

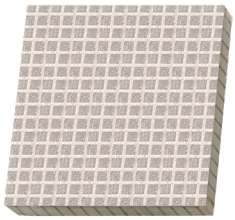

Characteristics

- Lower acoustic impedances
- High coupling coefficients
- High bandwidth and lower Qm
- Excellent durability and reliability

Specifications

Operation Frequency	500	kHz
Capacitance at 1 kHz	1300	pF
Impedance at Resonant Frequency	<50	Ω
Bandwidth	>100	kHz
Electro-mechanical Coupling Coefficient (Kt)	>60	%
Maximum Operational Temperature	100	°C

Dimensions

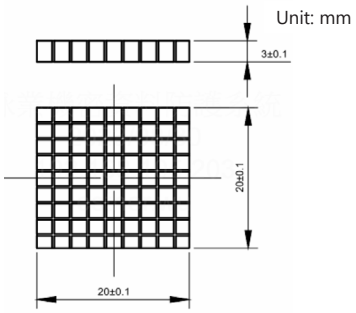

Model: GEY4
P/N: H2KGEY41000600

1000kHz 1-3 Composite

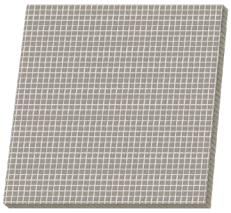

Characteristics

- Lower acoustic impedances
- High coupling coefficients
- High bandwidth and lower Qm
- Excellent durability and reliability

Specifications

Operation Frequency	1000	kHz
Capacitance at 1 kHz	2740	pF
Impedance at Resonant Frequency	<50	Ω
Bandwidth	>200	kHz
Electro-mechanical Coupling Coefficient (Kt)	>60	%
Maximum Operational Temperature	100	°C

Dimensions

Unit: mm

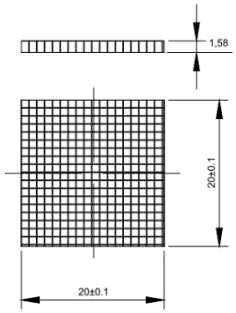

Model: GEY5
P/N: H2KGEY52000600

2000kHz 1-3 Composite

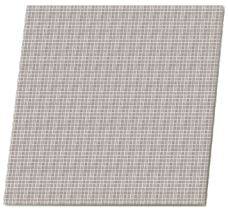

Characteristics

- Lower acoustic impedances
- High coupling coefficients
- High bandwidth and lower Qm
- Excellent durability and reliability

Specifications

Operation Frequency	2000	kHz
Capacitance at 1 kHz	5200	pF
Impedance at Resonant Frequency	<10	Ω
Bandwidth	>420	kHz
Electro-mechanical Coupling Coefficient (Kt)	>60	%
Maximum Operational Temperature	100	°C

Dimensions

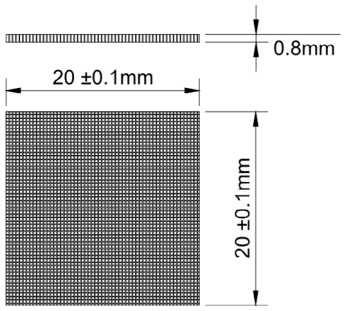

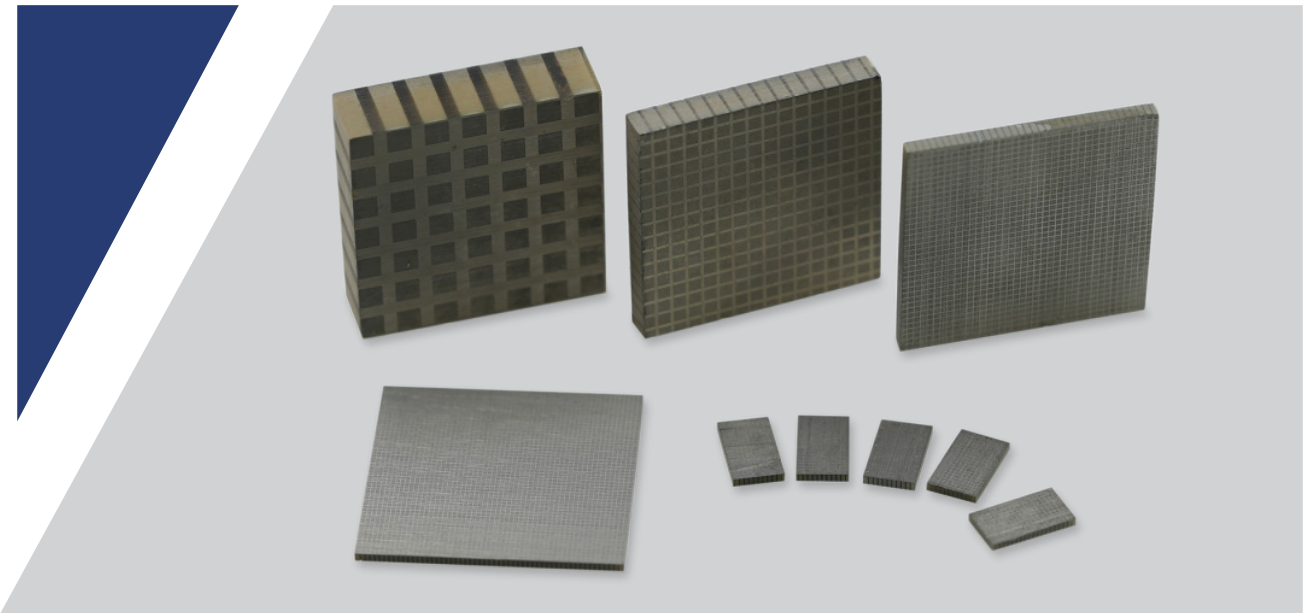

Table of 1–3 composite PZT

P/N		H2KGEY62000500	H2KGEY35000500	H2KGEY41000600	H2KGEY52000600
		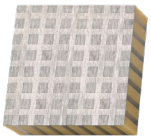	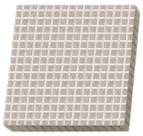		
Operation Frequency	kHz	200	500	1000	2000
Electro-mechanical Coupling Coefficient (Kt)	%	> 60	> 60	> 60	> 60
Bandwith	kHz	> 40	> 100	> 200	> 420
Maximum Operational Temperature	°C	100	100	100	100
Electrode	-	Ni Alloy	Ni Alloy	Ni Alloy	Ni Alloy
PZT Material	-	Soft PZT	Soft PZT	Soft PZT	Soft PZT

* Customized dimension, electrode, and frequency are available.

UPC Elements

We proudly introduce our premier material for your underwater transducers -- Unictron's porosity controlled (UPC) elements. UPC elements are piezoceramic composites featuring a controlled porous structure within a PZT ceramic matrix. Transducers made of UPC materials show a significantly broader bandwidth that works in a precise sweep pattern of many frequencies with good efficiency and high-power output. Unictron is the largest manufacturer of porosity controlled broadband piezoceramics in the world for commercial CHIRP sonar applications.

Characteristics

- Work in sweeping pattern of many frequencies
- With good efficiency and high power output
- Better S/N ratio
- Better resolution
- Low Q factor
- Lower ringing

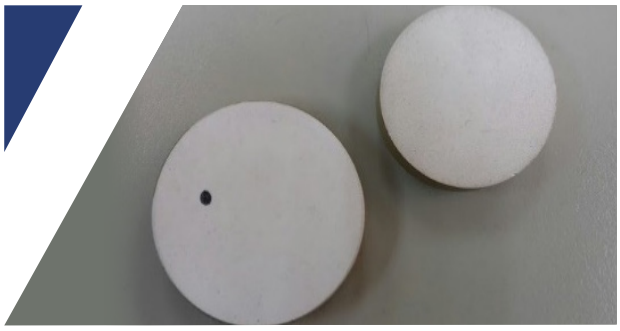

Applications

CHIRP (Compressed High Intensity Radar Pulse) based broadband transducer for fish finders and echo sounders.

Advantages of Broadband Transducer

Traditional commercial Sonar transducers operate only at one discrete frequency or dual frequencies while broadband transducers can work in sweeping pattern of multiple frequencies with excellent efficiency and high power output. This allows them to achieve better resolution and depth capability.

Traditional
Typical bandwidth is about **5–7 KHz**

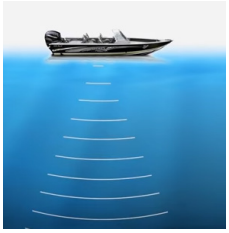

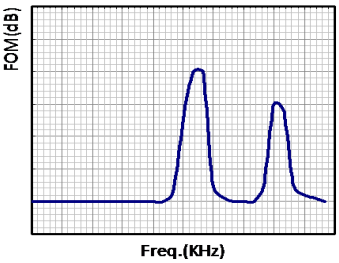

Broadband
Typical bandwidth is about **40–60 KHz**

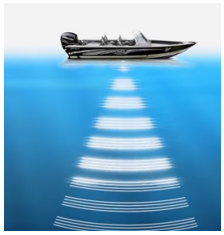

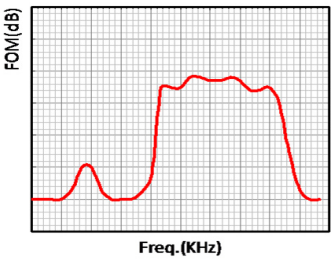

Bolt-Clamped Langevin Transducer (BLT)

The structure of the Bolt-Clamped Langevin Transducer (BLT) ultrasonic transducer plays a crucial role in various applications, particularly in healthcare sectors. For instance, in the medical field, our BLTs find their niche in applications ranging from medical scalpels and dental scalers to atomization of specialized viscous medicine. Across industries, they're vital for cutting, cleaning, welding of plastic, metals, and specialized materials. Whether it's BLTs simulation, design, or manufacturing, Unictron stands as your dependable partner. Our BLTs can be meticulously engineered using unique in-house piezoceramic material formulations, ensuring the precise resonant frequency and amplitude required.

Characteristics

- High power output, high efficiency
- High quality factor, low heat generation
- Excellent frequency stability
- Excellent mechanical strength and durability

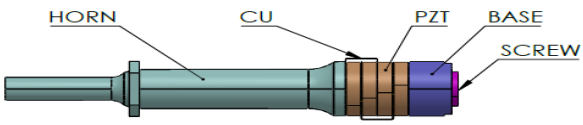

Schematic Drawing

Applications

Applications of BLT type Transducer:

Welding

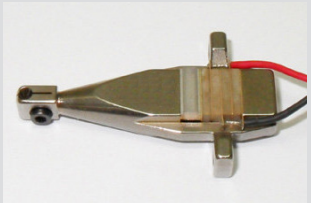

Wire Bonding

Ultrasonic Cleaner

Simulation of Transducer

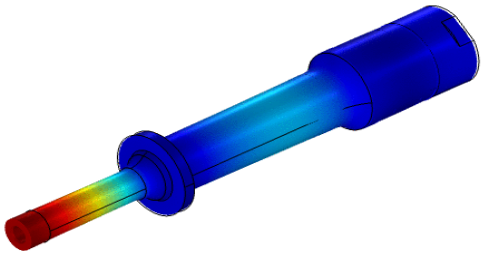

Characteristics

- High power output, high efficiency
- High-quality factor, low heat generation
- Excellent stability of frequency
- Excellent mechanical strength and durability

Specifications for Ultrasonic Scalpel			
Capacitance at 1 kHz	*1	2.1 ± 20%	nF
Resonant Frequency	*1	55.5~56.3	kHz
Resonant Impedance Zr	*1	≤60	Ohm
Displacement of Horn Tip	(Power 40W)	~ 18	μm

*1 Measured by KEYSIGNT E4990A at 25°C room temperature.

Dental Scaler

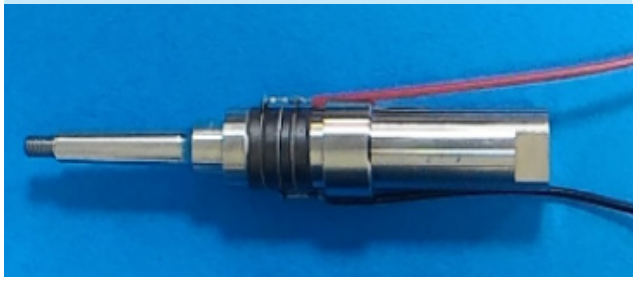

Characteristics

- Excellent stability of frequency
- High power output, high efficiency
- High-quality factor, low heat generation
- Excellent mechanical strength and durability

Specifications for Ultrasonic Scalpel			
Capacitance at 1 kHz	*1	TBD	nF
Resonant Frequency	*1	28~45	kHz
Resonant Impedance Zr	*1	TBD	Ohm

*1 Measured by KEYSIGNT E4990A at 25°C room temperature.

Piezoelectric Bending Actuator

Piezoelectric actuators are electromechanical transducers that convert electrical signals into mechanical displacement and are widely used as controlling or regulating devices in modern equipment. Unictron's bending actuator is an important type of piezoelectric actuator which can produce bending movement with designated force and displacement. Actuators with either unimorph or bimorph design are available per your request.

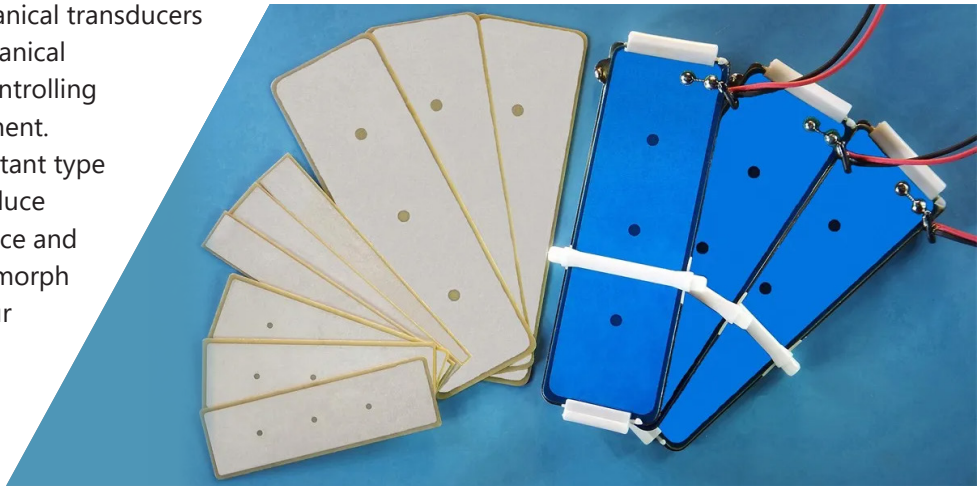

Characteristics

- High force output, short response time
- Low power consumption, low heat generation
- Excellent durability
- Excellent mechanical properties

Applications

- Actuators for needle selection in knitting machines
- Actuators of Braille displays for the visually impaired
- Controlling mechanism for valves and switches

Dimensions (mm)	Driving Voltage	Force (mN)	Displacement (mm)
64×26.3×0.56	±48V DC	Min. 320 / typical 400	Min. 0.70 / typical 0.80
64×26.3×0.56	±96V DC	Min. 320 / typical 400	Min. 0.70 / typical 0.80
40.5×12×0.63	±200V DC	Min. 400 / typical 500	Min. 0.70 / typical 0.80

Model: PPY4
P/N: H2KPPY40000000

Unimorph Actuator

Characteristics

- Lightweight
- Fast response time
- Low noise
- Stable force output
- vibration modes can be changed with selected electrical signal inputs

Specifications

Operation Frequency	50~300	Hz
Capacitance	140 ± 20%	nF
PZT Material	Soft PZT	
PZT Structure	Multilayer	
Driving Voltage	+100V~0V	Vpp
Operating temperature	-40~85	°C

※Note1: The design of the mechanism will affect the transmission of the vibration

※Note2: The dimension can be customized

Dimensions

Brass Ø27mm
Mutilayer Piezo Ø18.5mm

Unit: mm

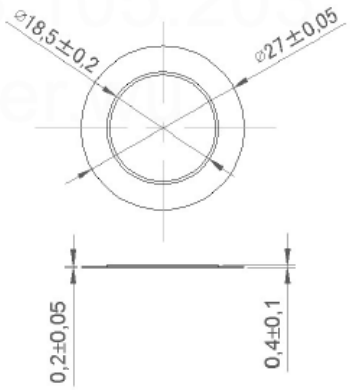

Piezo Haptic Actuator

Piezoceramic transducers offer haptic feedback in touch displays, presenting advantages like slimness, quick response, and low power consumption. Unictron provides varied piezo elements for tailored haptic applications, available in multiple shapes, sizes, and capacitances. Our advanced facilities ensure high-performance piezoceramic elements production. These actuators are characterized by their lightness, rapid response, low noise, and stability.

Characteristics

- Low profile
- Fast start-up time
- Low audible noise
- Stable vibration signal
- Easy to produce various vibration modes

* Customized sizes, shapes, thickness, and capacitances for haptic applications are available.

Air Transducers

Ultrasonic transducers are effective tools in short-range object detection. By calculating the time difference between emitted and reflected waves (known as time of flight or ToF), these transducers easily determine the distance to detected objects.

In the realm of ultrasonic detection, a wide spectrum of objects becomes detectable. It includes solids, liquids, and powders with various surface characteristics, regardless of color, transparency, and hardness. This versatility makes ultrasonic transducers useful in various applications, such as parking sensors, level sensors, double feed detection, edge position control, flow meters, medical probes, and more.

Unictron Ultrasonic Air Transducers

Non-contact Ultrasonic Detection

- Double Feed/ Robot Vacuum Cleaner

- EPC

- Level/Distance Sensor

- Dual-frequency Level Detection

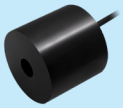

Gas Flow Meter

- Gas Flow

- Anemometer

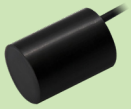

Frequencies: from 40 kHz to 500 kHz

MAIN FEATURES

End-to-End Control

Unictron oversees the entire manufacturing process, from formulating ceramic powders to crafting piezo elements and assembling air transducers. Our meticulous supervision at each production stage allows us to finely tune the mechanical and electrical properties of the transducers.

In-house Expertise

Leveraging our comprehensive background, we've cultivated expertise in:

- In-house production of piezoceramic elements and acoustic matching layers.
- Implementation of patented technologies.
- Achieving higher sensitivity while maintaining a tighter process output distribution.
- Ensuring exceptional reliability.

* All specifications are subject to change without notice.

Double Feed Detection

Ultrasound can penetrate much more through a single sheet compared with multiple sheets. It has been widely used in automatic document feeders (ADF).

Signal with a single sheet	Signal with multiple sheets

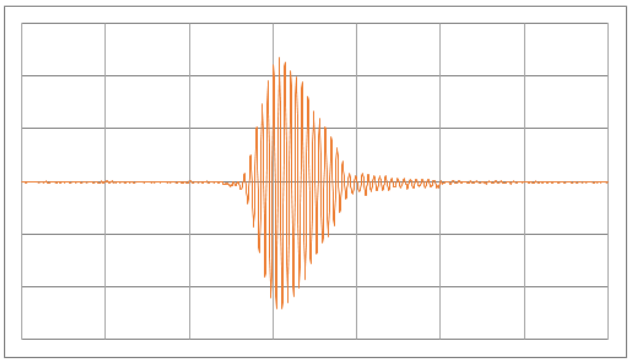

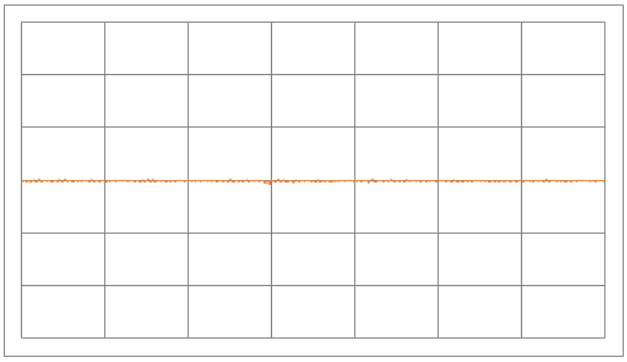

A280A1 280 kHz Air transducer

Major Applications

Web guiding
Double feed detection
Proximity measurement

Specifications

Operation Frequency	280	kHz
Capacitance (@ 1 kHz, 1Vrms)	1300 ± 20%	pF
Directivity (Full Angle @-6 dB)	10 ± 2	degree
Maximum Sensing Range	70	cm
Blind Zone	< 3	cm
Dimension-OD	9.9	mm
Dimension-Height	7.3	mm
Housing Material	PBT	
Wire	Lead	

Dimensions Unit: mm

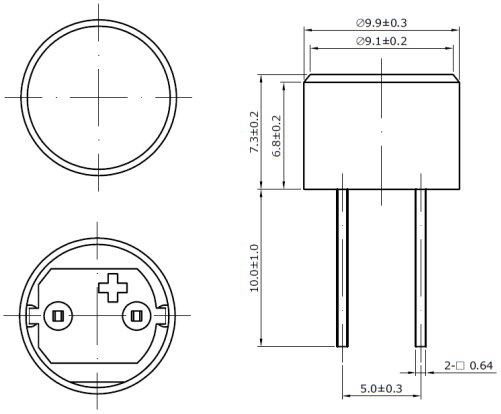

* All specifications are subject to change without notice.

A300A 300 kHz Air transducer

Major Applications

Web guiding
Double feed detection
Proximity measurement

Specifications

Operation Frequency	300	kHz
Capacitance (@ 1 kHz, 1Vrms)	1300 ± 20%	pF
Directivity (Full Angle @-6 dB)	10 ± 2	degree
Maximum Sensing Range	60	cm
Blind Zone	< 3	cm
Dimension-OD	9.9	mm
Dimension-Height	7.3	mm
Housing Material	PBT	
Wire	Lead	

Dimensions

Unit: mm

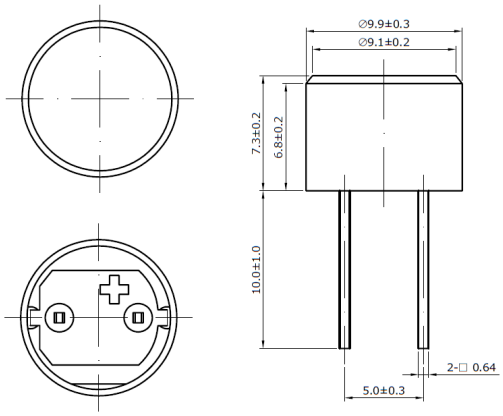

A330A1 330 kHz Air transducer

Major Applications

Web guiding
Double feed detection
Proximity measurement

Specifications

Operation Frequency	330	kHz
Capacitance (@ 1 kHz, 1Vrms)	1300 ± 20%	pF
Directivity (Full Angle @-6 dB)	10 ± 2	degree
Maximum Sensing Range	50	cm
Blind Zone	< 3	cm
Dimension-OD	9.9	mm
Dimension-Height	7.3	mm
Housing Material	PBT	
Wire	Lead	

Dimensions

Unit: mm

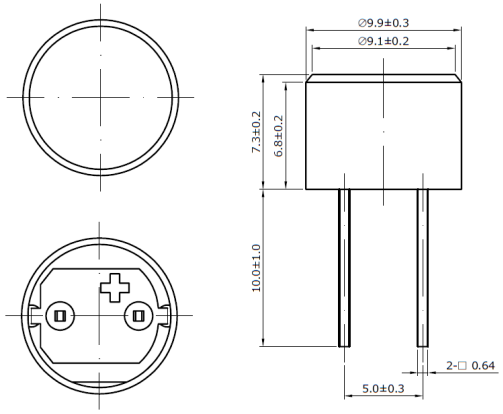

* All specifications are subject to change without notice.

Edge Position Control

The EPC system equipped with ultrasonic transducers is suitable for most materials, including metal or non-metal, transparent or opaque sheet, mesh or film, and any color of object, etc.

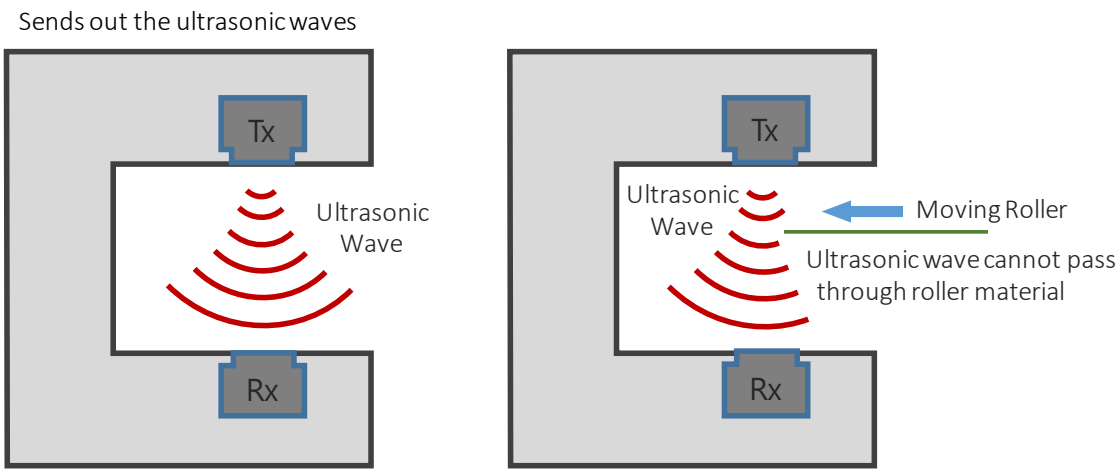

Ultrasound transmitted from Tx to Rx normally

Ultrasound is partially blocked, the strength of the received signal is weaker

A150A 150 kHz Air transducer

Major Applications

Web guiding
Proximity measurement

Specifications		
Operation Frequency	150	kHz
Capacitance (@ 1 kHz, 1Vrms)	1000 ± 20%	pF
Directivity (Full Angle @-3 dB)	8 ± 2	degree
Maximum Sensing Range	250	cm
Blind Zone	< 15	cm
Dimension-OD	17.15	mm
Dimension-Height	12.70	mm
Housing Material	Aluminum	
Wire	UL1430 #24AWG Ø1.43mm	

Dimensions Unit: mm

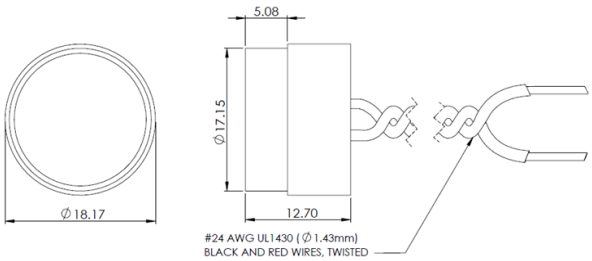

* All specifications are subject to change without notice.

A170W1 170 kHz Air transducer

Major Applications

Web guiding
Proximity measurement

Specifications

Operation Frequency	170	kHz
Capacitance (@ 1 kHz, 1Vrms)	3000 ± 20%	pF
Directivity (Full Angle @-6 dB)	X 5 ± 2 Y 25 ± 2	degree
Working Rang	> 28	mm
Dimension-Length	54.6	mm
Dimension-Width	18.2	mm
Dimension-Height	10.0	mm
Housing Material	Plastic	
Wire	UL1430 #24AWG Ø1.43mm	

Dimensions

Unit: mm

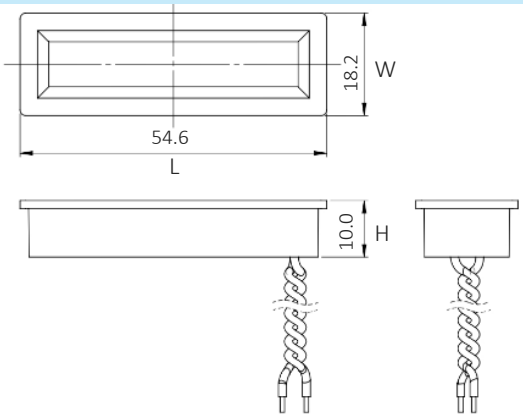

A200H1 200 kHz Air transducer

Major Applications

Web guiding
Proximity measurement

Specifications

Operation Frequency	200	kHz
Capacitance (@ 1 kHz, 1Vrms)	500 ± 20%	pF
Directivity (Full Angle @-6 dB)	10 ± 2	degree
Maximum Sensing Range	200	cm
Blind Zone	< 10	cm
Dimension-OD	18.8	mm
Dimension-Height	10.7	mm
Housing Material	Aluminum	
Wire	UL1430 #24AWG Ø1.43mm	

Dimensions

Unit: mm

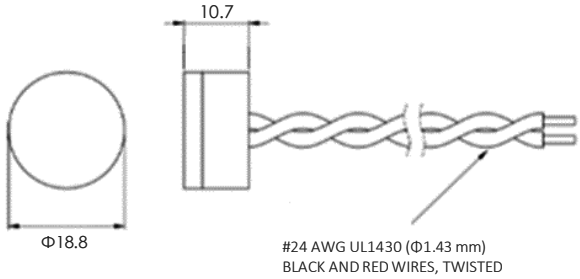

* All specifications are subject to change without notice.

Non-contact Ultrasonic Level Detection

Level depth can be detected with an ultrasonic transducer, acting as a transmitting and a receiving unit within one body, based on ToF calculations.

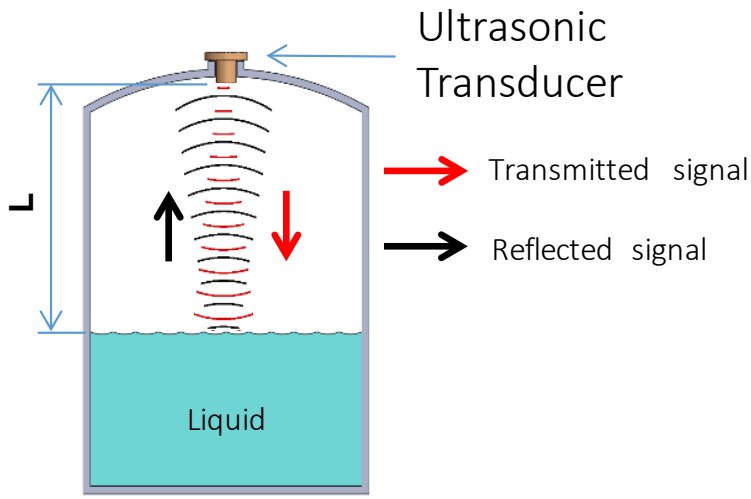

ToF = t ; Sound Velocity = V

Level depth = L
L = (V*t)/2

A050A 50 kHz Air transducer

Major Applications

Level detection
Proximity measurement

Specifications		
Operation Frequency	50	kHz
Capacitance (@ 1 kHz, 1Vrms)	3500 ± 20%	pF
Directivity (Full Angle @-3 dB)	10 ± 2	degree
Maximum Sensing Range	10	meter
Blind Zone	< 30	cm
Dimension-OD	47.0	mm
Dimension-Height	48.0	mm
Housing Material	PVDF	
Wire	RG174/U 50 ohm Ø2.7mm	

Dimensions Unit: mm

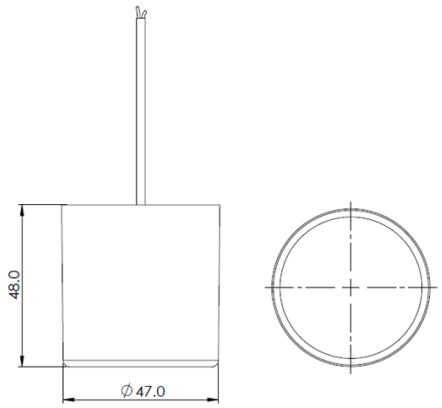

* All specifications are subject to change without notice.

A050B1 50 kHz Air transducer

Major Applications

Level detection
Proximity measurement

Specifications

Operation Frequency	50	kHz
Capacitance (@ 1 kHz, 1Vrms)	5000 ± 20%	pF
Directivity (Full Angle @-3 dB)	10 ± 2	degree
Maximum Sensing Range	12	meter
Blind Zone	< 30	cm
Dimension-OD	56.0	mm
Dimension-Height	51.0	mm
Housing Material	PVDF	
Wire	UL2464 #24AWG Ø4.0mm	

Dimensions Unit: mm

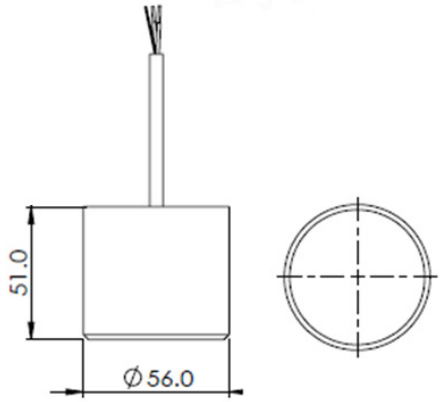

A054L1 54 kHz Air transducer

Major Applications

Level detection
Proximity measurement

Specifications

Operation Frequency	54	kHz
Capacitance (@ 1 kHz, 1Vrms)	2600 ± 20%	pF
Directivity (Full Angle @-3 dB)	10 ± 2	degree
Maximum Sensing Range	10	meter
Blind Zone	< 20	cm
Dimension-OD	47.0	mm
Dimension-Height	48.0	mm
Housing Material	PVDF	
Wire	UL2464 #22AWG Ø4.0mm	

Dimensions Unit: mm

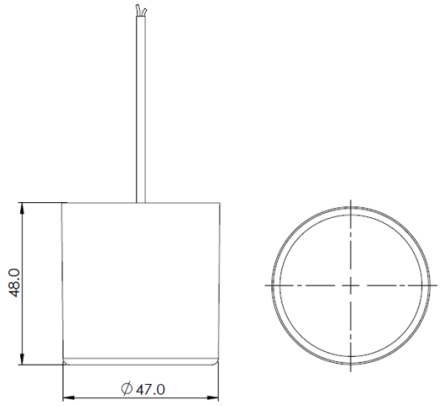

* All specifications are subject to change without notice.

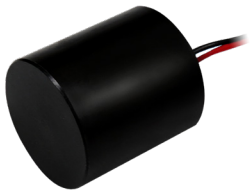

A100A1 100 kHz Air transducer

Major Applications

Level detection
Proximity measurement

Specifications

Operation Frequency	100	kHz
Capacitance (@ 1 kHz, 1Vrms)	1600 ± 20%	pF
Directivity (Full Angle @-3 dB)	10 ± 2	degree
Maximum Sensing Range	4	meter
Blind Zone	< 20	cm
Dimension-OD	29.0	mm
Dimension-Height	30.0	mm
Housing Material	PVDF	
Wire	UL1430 #24AWG Ø1.43mm	

Dimensions Unit: mm

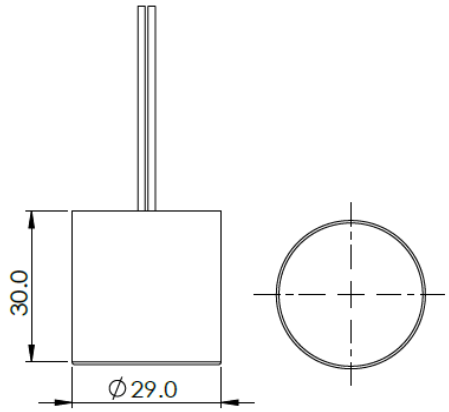

A100C1 100 kHz Air transducer

Major Applications

Level detection
Proximity measurement

Specifications

Operation Frequency	100	kHz
Capacitance (@ 1 kHz, 1Vrms)	3400 ± 20%	pF
Directivity (Full Angle @-3 dB)	10 ± 2	degree
Maximum Sensing Range	4	meter
Blind Zone	< 20	cm
Dimension-OD	29.0	mm
Dimension-Height	56.1	mm
Housing Material	PVDF	
Wire	UL2464 #22AWG Ø4.0mm	

Dimensions Unit: mm

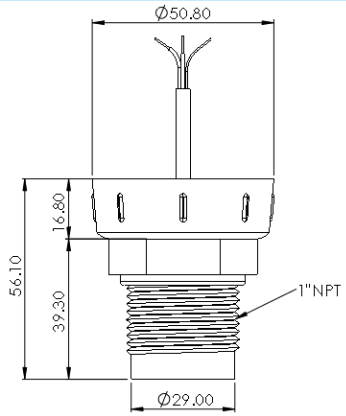

* All specifications are subject to change without notice.

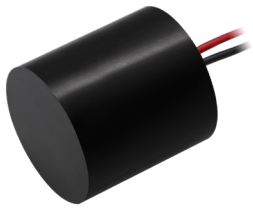

A125A1 125 kHz Air transducer

Major Applications

Level detection
Proximity measurement

Specifications

Operation Frequency	125	kHz
Capacitance (@ 1 kHz, 1Vrms)	1000 ± 20%	pF
Directivity (Full Angle @-3 dB)	10 ± 2	degree
Maximum Sensing Range	3	meter
Blind Zone	< 15	cm
Dimension-OD	25.0	mm
Dimension-Height	25.0	mm
Housing Material	PVDF	
Wire	UL1430 #24AWG Ø1.43mm	

Dimensions

Unit: mm

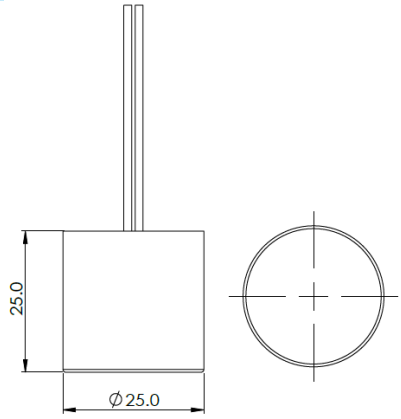

A125E 125 kHz Air transducer

Major Applications

Level detection
Proximity measurement

Specifications

Operation Frequency	125	kHz
Capacitance (@ 1 kHz, 1Vrms)	1000 ± 20%	pF
Directivity (Full Angle @-3 dB)	10 ± 2	degree
Maximum Sensing Range	3	meter
Blind Zone	< 15	cm
Dimension-OD	29.0	mm
Dimension-Height (transducer + cover)	126.6	mm
Housing Material	PVDF	
Wire	UL2464 #22AWG Ø4.0mm	

Dimensions

Unit: mm

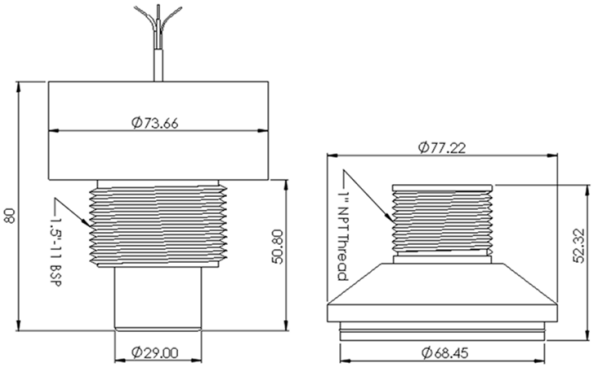

* All specifications are subject to change without notice.

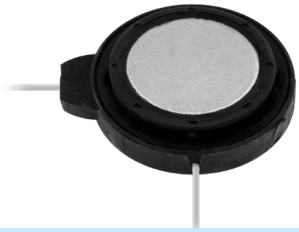

A180M1 180 kHz Air transducer

Major Applications

Level detection
Proximity measurement

Specifications

Operation Frequency	180	kHz
Capacitance (@ 1 kHz, 1Vrms)	400 ± 20%	pF
Directivity (Full Angle @-3 dB)	10 ± 2	degree
Maximum Sensing Range	2	meter
Blind Zone	< 10	cm
Dimension-OD	18.2	mm
Dimension-Height	5.25	mm
Housing Material	Elastomer	
Wire	UL1430 #24AWG Ø1.43mm	

Dimensions Unit: mm

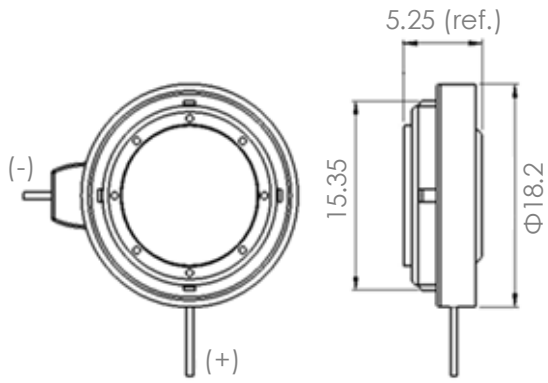

A200A1 200 kHz Air transducer

Major Applications

Level detection
Proximity measurement

Specifications

Operation Frequency	200	kHz
Capacitance (@ 1 kHz, 1Vrms)	500 ± 20%	pF
Directivity (Full Angle @-3 dB)	8 ± 2	degree
Maximum Sensing Range	2	meter
Blind Zone	< 5	cm
Dimension-OD	16.0	mm
Dimension-Height	19.0	mm
Housing Material	PVDF	
Wire	UL1430 #24AWG Ø1.43mm	

Dimensions Unit: mm

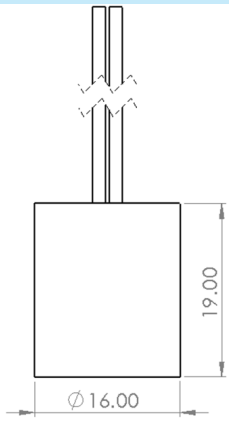

* All specifications are subject to change without notice.

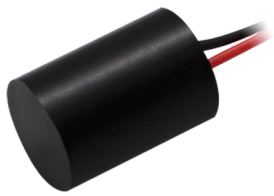

A240A1 240 kHz Air transducer

Major Applications

Level detection
Proximity measurement

Specifications

Operation Frequency	240	kHz
Capacitance (@ 1 kHz, 1Vrms)	400 ± 20%	pF
Directivity (Full Angle @-3 dB)	8 ± 2	degree
Maximum Sensing Range	1.2	meter
Blind Zone	< 4	cm
Dimension-OD	13.5	mm
Dimension-Height	18.5	mm
Housing Material	PVDF	
Wire	UL1430 #24AWG Ø1.43mm	

Dimensions

Unit: mm

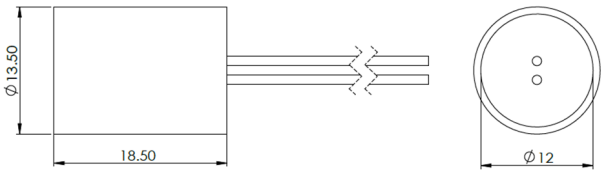

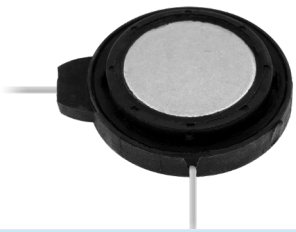

A250M1 250 kHz Air transducer

Major Applications

Level detection
Proximity measurement

Specifications

Operation Frequency	250	kHz
Capacitance (@ 1 kHz, 1Vrms)	400 ± 20%	pF
Directivity (Full Angle @-3 dB)	8 ± 2	degree
Maximum Sensing Range	1	meter
Blind Zone	< 5	cm
Dimension-OD	18.2	mm
Dimension-Height	5.25	mm
Housing Material	Elastomer	
Wire	UL1430 #24AWG Ø1.43mm	

Dimensions

Unit: mm

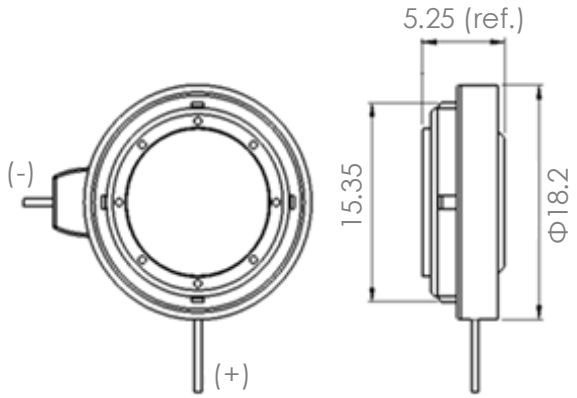

* All specifications are subject to change without notice.

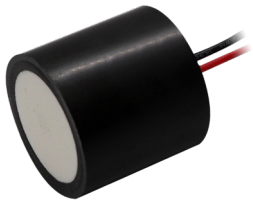

A100F1 100 kHz Air transducer

Major Applications

Level detection
Proximity measurement

Specifications

Operation Frequency	100	kHz
Capacitance (@ 1 kHz, 1Vrms)	1600 ± 20%	pF
Directivity (Full Angle @-3 dB)	10 ± 2	degree
Maximum Sensing Range	4	meter
Blind Zone	< 20	cm
Dimension-OD	29.0	mm
Dimension-Height	28.5	mm
Housing Material	PVDF	
Wire	UL1430 #24AWG Ø1.43mm	

Dimensions Unit: mm

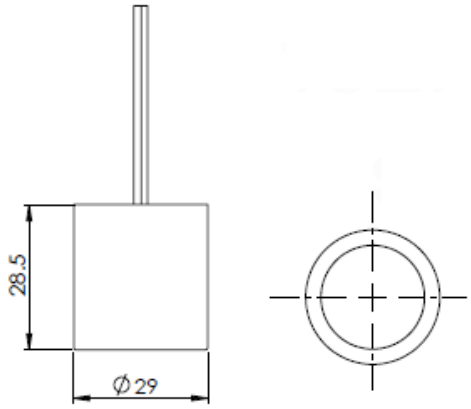

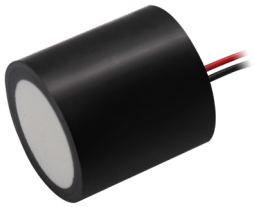

A125F1 125 kHz Air transducer

Major Applications

Level detection
Proximity measurement

Specifications

Operation Frequency	125	kHz
Capacitance (@ 1 kHz, 1Vrms)	1000 ± 20%	pF
Directivity (Full Angle @-3 dB)	10 ± 2	degree
Maximum Sensing Range	3	meter
Blind Zone	< 15	cm
Dimension-OD	25.0	mm
Dimension-Height	23.5	mm
Housing Material	PVDF	
Wire	UL1430 #24AWG Ø1.43mm	

Dimensions Unit: mm

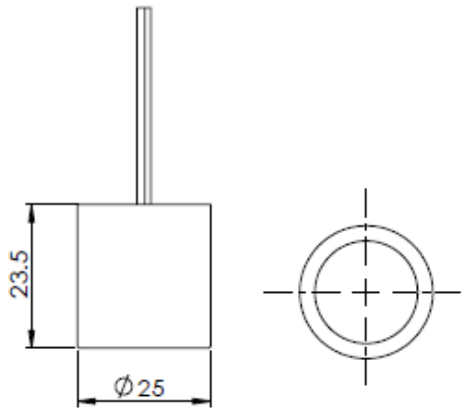

* All specifications are subject to change without notice.

A200F1 200 kHz Air transducer

Major Applications

Level detection
Proximity measurement

Specifications

Operation Frequency	200	kHz
Capacitance (@ 1 kHz, 1Vrms)	500 ± 20%	pF
Directivity (Full Angle @-3 dB)	8 ± 2	degree
Maximum Sensing Range	2	meter
Blind Zone	< 5	cm
Dimension-OD	16.0	mm
Dimension-Height	18.0	mm
Housing Material	PVDF	
Wire	UL1430 #24AWG Ø1.43mm	

Dimensions

Unit: mm

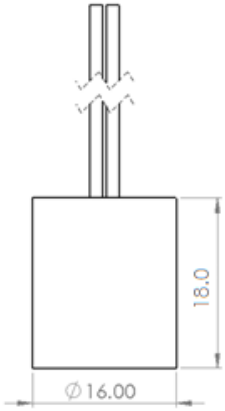

A240F1 240 kHz Air transducer

Major Applications

Level detection
Proximity measurement

Specifications

Operation Frequency	240	kHz
Capacitance (@ 1 kHz, 1Vrms)	400 ± 20%	pF
Directivity (Full Angle @-3 dB)	8 ± 2	degree
Maximum Sensing Range	1.2	meter
Blind Zone	< 4	cm
Dimension-OD	13.5	mm
Dimension-Height	17.5	mm
Housing Material	PVDF	
Wire	UL1430 #24AWG Ø1.43mm	

Dimensions

Unit: mm

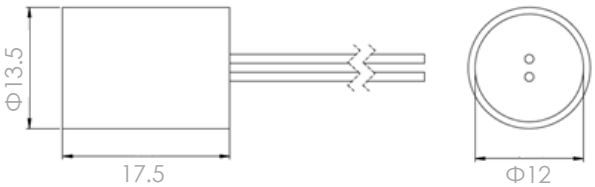

* All specifications are subject to change without notice.

Ultrasonic Gas Flow Meter

Gas flow rate can be detected using a pair of ultrasonic transducers, based on ToF difference between upstream and downstream directions.

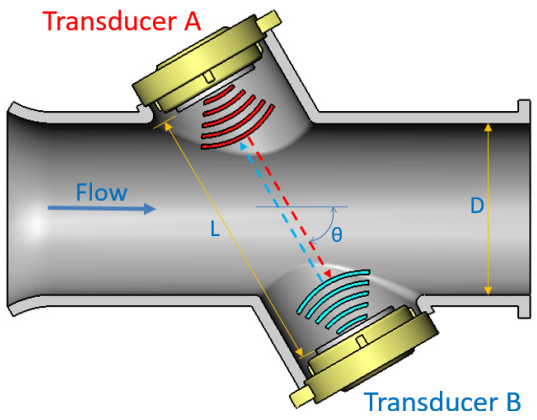

$$V = L/2\cos\theta\ [\ 1/T_{AB} - 1/T_{BA}\ ]$$

V = Gas flow rate
T_{AB}: downstream ToF
T_{BA}: upstream ToF

A200D1 200 kHz Air transducer

Major Applications

Gas flow meter

Specifications		
Operation Frequency	200	kHz
Capacitance (@ 1 kHz, 1Vrms)	500 ± 20%	pF
Directivity (Full Angle @-3 dB)	8 ± 2	degree
Dimension-OD	16.0	mm
Dimension-Height	19.0	mm
ZFD (Zero Flow Drift)	< 1.0	ns
Housing Material	PVDF	
Operating Temperature	-25°C to +55°C	
Storage Temperature	-40°C to +85°C	

Dimensions Unit: mm

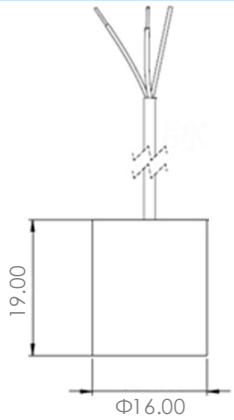

* All specifications are subject to change without notice.

A200M5 200 kHz Air transducer

Major Applications

Gas flow meter
Proximity measurement

Specifications

Operation Frequency	200	kHz
Capacitance (@ 1 kHz, 1Vrms)	350 ± 20%	pF
Directivity (Full Angle @-3 dB)	9 ± 2	degree
Dimension-OD	18.2	mm
Dimension-Height	8.5 (ref.)	mm
ZFD (Zero Flow Drift)	< 1.0	ns
Housing Material	Elastomer	
Operating Temperature	-25°C to +55°C	
Storage Temperature	-40°C to +85°C	

Dimensions

Unit: mm

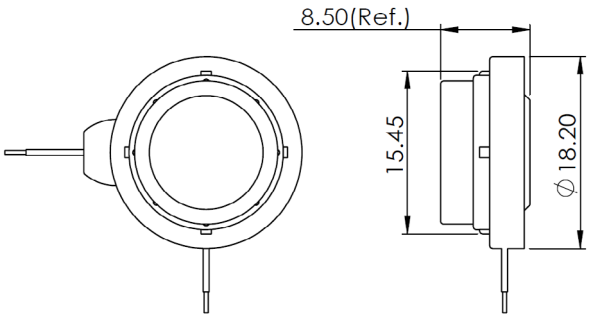

A240B1 240 kHz Air transducer

Major Applications

Anemometer
Gas flow meter

Specifications

Operation Frequency	240	kHz
Capacitance (@ 1 kHz, 1Vrms)	400 ± 20%	pF
Directivity (Full Angle @-3 dB)	8 ± 2	degree
Dimension-OD	13.5	mm
Dimension-Height	18.5	mm
ZFD (Zero Flow Drift)	< 1.0	ns
Housing Material	PVDF	
Operating Temperature	-30°C to +60°C	
Storage Temperature	-40°C to +85°C	

Dimensions

Unit: mm

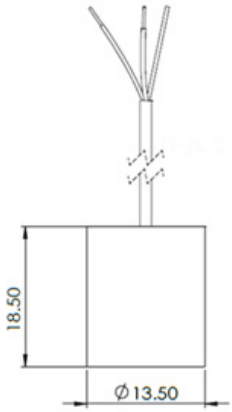

* All specifications are subject to change without notice.

A240M3 240 kHz Air transducer

Major Applications

Gas flow meter
Proximity measurement

Specifications

Operation Frequency	240	kHz
Capacitance (@ 1 kHz, 1Vrms)	400 ± 20%	pF
Directivity (Full Angle @-3 dB)	10 ± 2	degree
Dimension-OD	18.2	mm
Dimension-Height	7.0 (ref.)	mm
ZFD (Zero Flow Drift)	< 1.0	ns
Housing Material	Elastomer	
Operating Temperature	-25°C to +55°C	
Storage Temperature	-40°C to +85°C	

Dimensions Unit: mm

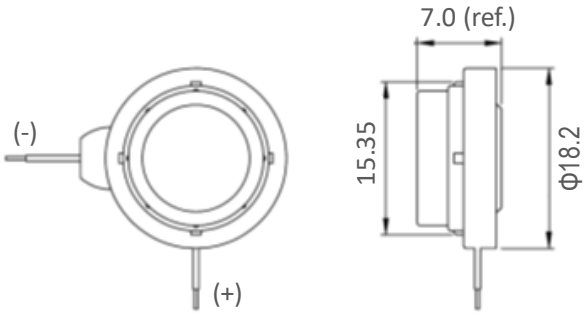

A500B1 500 kHz Air transducer

Major Applications

Gas flow meter
Proximity measurement

Specifications

Operation Frequency	500	kHz
Capacitance (@ 1 kHz, 1Vrms)	320 ± 20%	pF
Directivity (Full Angle @-3 dB)	7 ± 2	degree
Dimension-OD	18.2	mm
Dimension-Height	6.35 (ref.)	mm
ZFD (Zero Flow Drift)	< 1.0	ns
Housing Material	Elastomer	
Operating Temperature	-25°C to +55°C	
Storage Temperature	-40°C to +85°C	

Dimensions Unit: mm

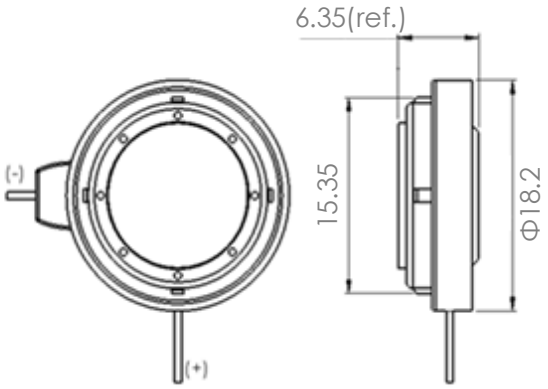

* All specifications are subject to change without notice.

Dual-frequency Non-contact Ultrasonic Level Detection

Unictron has successfully developed a novel type of dual-frequency non-contact ultrasonic air transducer with innovative technologies. This provides the advantage of maximizing detection distance and minimizing the blind zone in one transducer, making the application of the transducer more flexible.

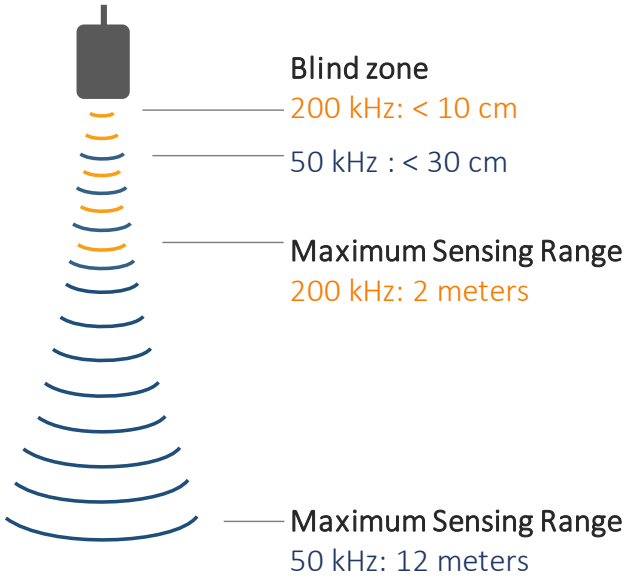

Y050A1 50/200 kHz Air transducer

Major Applications

Level detection
Proximity measurement

Specifications

	50 kHz	200 kHz	
Operation Frequency	50	200	kHz
Capacitance (@ 1 kHz, 1Vrms)	1500 ± 20%		pF
Directivity (Full Angle @-3 dB)	10 ± 2	6 ± 2	degree
Maximum Sensing Range	12	2	meter
Blind Zone	< 30	< 10	cm
Housing Material	PVDF		

Dimensions Unit: mm

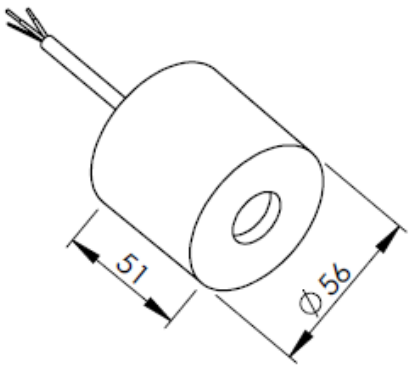

* All specifications are subject to change without notice.

Y050T1 50/200 kHz Air transducer

Major Applications

Level detection
Proximity measurement

Specifications

	50 kHz	200 kHz	
Operation Frequency	50	200	kHz
Capacitance (@ 1 kHz, 1Vrms)	1500 ± 20%		pF
Directivity (Full Angle @-3 dB)	10 ± 2	6 ± 2	degree
Maximum Sensing Range	12	2	meter
Blind Zone	< 30	< 10	cm
Housing Material	PVDF		

Dimensions

Unit: mm

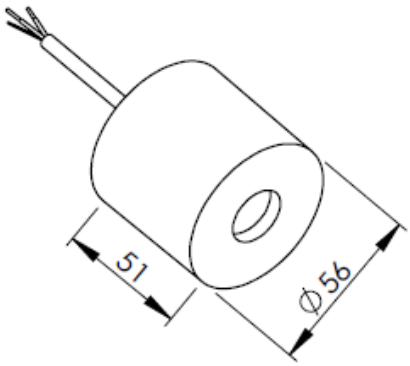

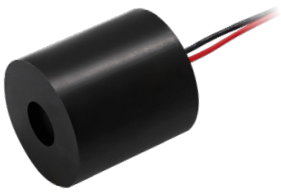

Y100T1 100/250 kHz Air transducer

Major Applications

Level detection
Proximity measurement

Specifications

	100 kHz	250 kHz	
Operation Frequency	100	250	kHz
Capacitance (@ 1 kHz, 1Vrms)	720 ± 20%		pF
Directivity (Full Angle @-3 dB)	10 ± 2	5 ± 2	degree
Maximum Sensing Range	4	0.8	meter
Blind Zone	< 20	< 7	cm
Housing Material	PVDF		

Dimensions

Unit: mm

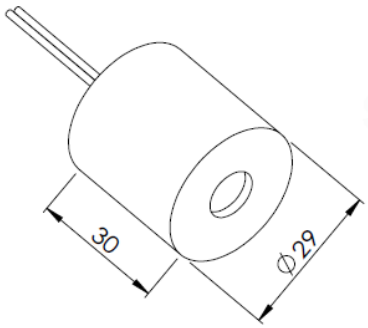

* All specifications are subject to change without notice.

Level Detection Through Liquid

LPY1 1 MHz Level sensor transducer

Major Applications

Level detection

Specifications

Operation Frequency	1	MHz
Echo Voltage	> 50	mV
Capacitance (@ 1 kHz)	1250 ± 20%	pF
Maximum Driving Voltage	50	Vpp
Operating Temperature	-20 ~ 70	°C
Storage Temperature	-30 ~ 80	°C
Dimension-Height	8	mm
Housing Material	Aluminum	
Wire	UL10368 #30AWG Ø0.8mm	

Dimensions Unit: mm

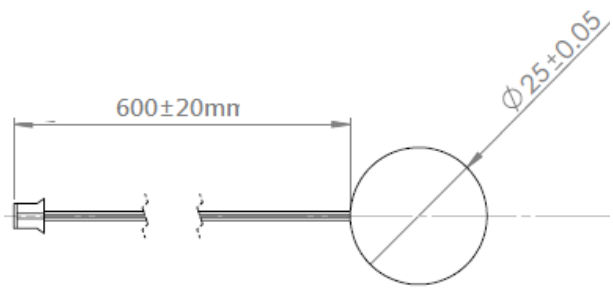

Sensitivity Measurement Diagram

Sensitivity measurement
Liquid level: 10 cm (olive oil) / container: HDPE

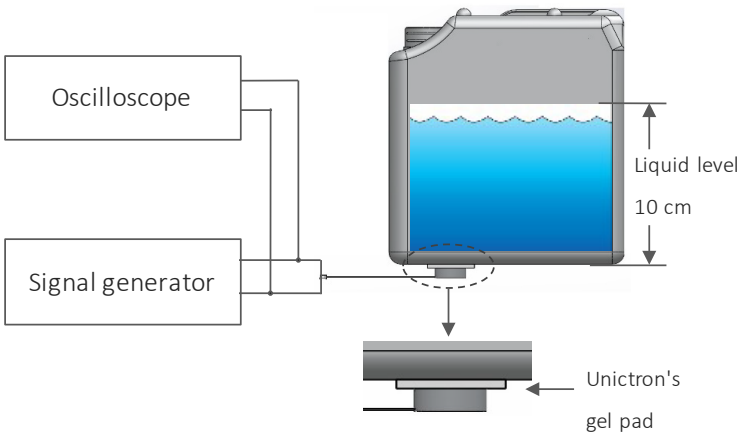

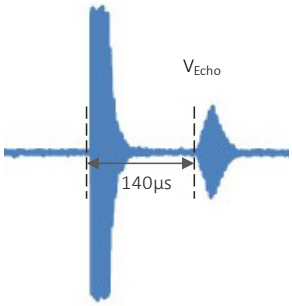

Drive Signal (VDriving): 1 MHz 3.3v 20 pulses,
Drive interval: 10 ms
Echo Signal (VEcho) : For 10 cm olive oil level,
echo signal appears at around 140 μs

* All specifications are subject to change without notice.

Proximity Sensor

BPY3 40 kHz Ultrasonic transducer

Major Applications

Object and distance detection
Waste and fill level detection

Specifications

Operation Frequency	40	kHz
Echo Voltage*	> 200	mV
Capacitance (@ 1 kHz)	1800 ± 20%	pF
Resonant Impedance	< 2000	Ohm
Operating Temperature	-40 ~ 80	°C
Storage Temperature	-10 ~ 80	°C
Dimension-Height	6.8	mm
Housing Material	Aluminum	
Wire	UL1007 #24AWG Ø1.45mm	

Dimensions Unit: mm

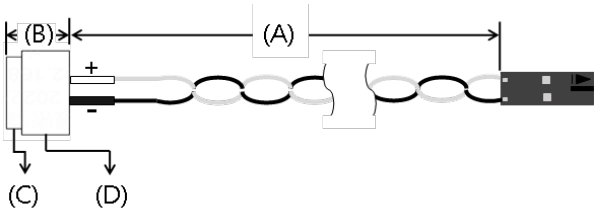

(A) 130 ± 5
(B) 9 ± 0.3
(C) 12.5 ± 0.3
(D) 14.4 ± 0.3

*** burst: 20 cycles, gain: 330 @distance: 100cm**

Ultrasonic Time-of-Flight Measurement

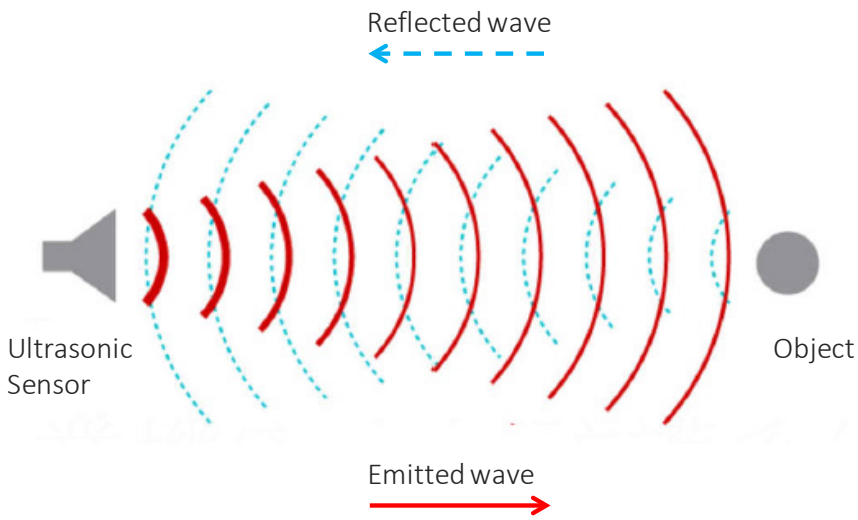

* All specifications are subject to change without notice.

Flow Meter for Liquid

MPYA 1 MHz Flow meter transducer

Major Applications

Liquid flow meter

Specifications

Operation Frequency	1	MHz
Capacitance (@ 1 kHz)	1200 ± 20%	pF
Sensitivity dB*	-28 min	dB
Beam Angle (-3dB full angle)	5	degree
Operation Voltage	50 max	Vpp
Operation Temperature	4 ~ 80	°C
Storage Temperature	-10 ~ 80	°C
Housing Material	PPS	
Wire	UL2547 #28AWG Ø2.8mm	

Dimensions Unit: mm

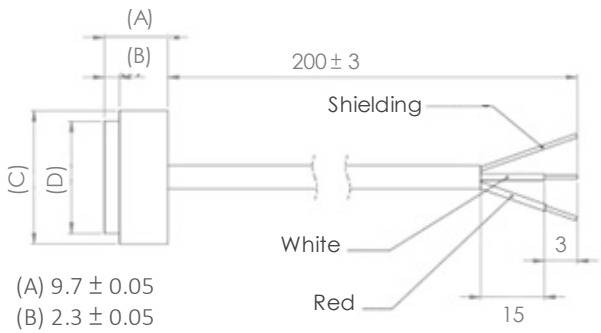

(A) 9.7 ± 0.05
(B) 2.3 ± 0.05
(C) 20.2 ± 0.05
(D) 17 ± 0.05

* Applied voltage Vpp = 3.3V, sine wave, 20 cycles burst, Water level 10 cm; Water temperature 25°C

Sensitivity Measurement Diagram

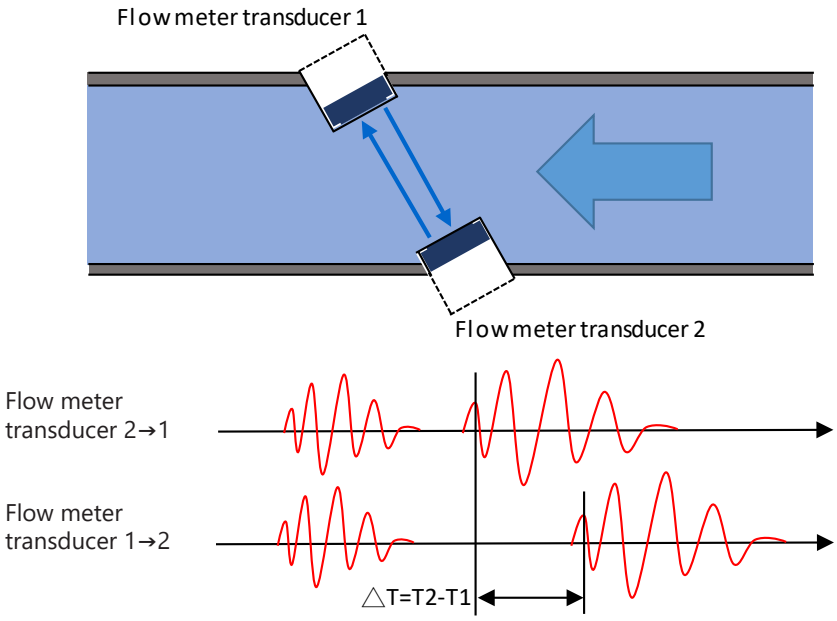

* All specifications are subject to change without notice.

Product Family

Double Feed Detection / Edge Position Control

Model Name	A280A1	A300A	A330A1	A150A	A170W1	A200H1
						
Frequency (kHz)	280	300	330	150	170	200
Dimensions (mm)	OD 9.9 H 7.3	OD 9.9 H 7.3	OD 9.9 H 7.3	OD 17.15 H 12.70	L54.6W18.2 H10.0	OD 18.8 H 10.5
Directivity (full angle)	10 ± 2° (@-6 dB)	10 ± 2° (@-6 dB)	10 ± 2° (@-6 dB)	8 ± 2° (@-3 dB)	X 5 ± 2° Y 25 ± 2° (@-6 dB)	10 ± 2° (@-6 dB)
Max. Sensing Range (cm)	70	60	50	250	> 28 mm (working range)	200
Blind Zone (cm)	< 3	< 3	< 3	< 15	< 15	< 10
Housing Material	Plastic	Plastic	Plastic	Aluminum	Plastic	Aluminum
Major Applications	Web guiding Proximity Double feed	Web guiding Proximity Double feed	Web guiding Proximity Double feed	Web guiding Proximity	WireWeb guiding Proximity	Web guiding Proximity

Non-contact Ultrasonic Level Detection

Model Name	A050A	A050B1	A054L1	A100A1	A100C1	A125A1
						
Frequency (kHz)	50	50	54	100	100	125
Dimensions (mm)	OD 47.0 H 48.0	OD 56.0 H 51.0	OD 47.0 H 48.0	OD 29.0 H 30.0	OD 29.0 H 56.1	OD 25.0 H 25.0
Directivity (full angle @-3 dB)	10 ± 2°	10 ± 2°	10 ± 2°	10 ± 2°	10 ± 2°	10 ± 2°
Max. Sensing Range (meter)	10	12	10	4	4	3
Blind Zone (cm)	< 30	< 30	< 20	< 20	< 20	< 15
Housing Material	PVDF	PVDF	PVDF	PVDF	PVDF	PVDF
Major Applications	Level detection	Level detection	Level detection	Level detection	Level detection	Level detection

* All specifications are subject to change without notice.

Product Family

Non-contact Ultrasonic Level Detection

Model Name	A125E	A180M1	A200A1	A240A1	A250M1
		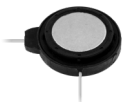			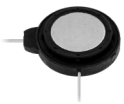
Frequency (kHz)	125	180	200	240	250
Dimensions (mm)	OD 29.0 H 126.6	OD 18.2 H 5.25	OD 16.0 H 19.0	OD 13.5 H 18.5	OD 18.2 H 5.25
Directivity (full angle @-3 dB)	10 ± 2°	10 ± 2°	8 ± 2°	8 ± 2°	10 ± 2°
Max. Sensing Range (meter)	3	2	2	1.2	1
Blind Zone (cm)	< 15	< 10	< 5	< 4	< 5
Housing Material	PVDF	Elastomer	PVDF	PVDF	Elastomer
Major Applications	Level detection	Level detection	Level detection	Level detection	Level detection

Non-contact Ultrasonic Level Detection

Model Name	A100F1	A125F1	A200F1	A240F1
	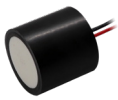	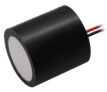		
Frequency (kHz)	100	125	200	240
Dimensions (mm)	OD 29.0 H 28.5	OD 25.0 H 23.5	OD 16.0 H 18.0	OD 13.5 H 17.5
Directivity (full angle @-3 dB)	10 ± 2°	10 ± 2°	8 ± 2°	8 ± 2°
Max. Sensing Range (meter)	4	3	2	1.2
Blind Zone (cm)	< 20	< 15	< 5	< 4
Housing Material	PVDF	PVDF	PVDF	PVDF
Major Applications	Level detection	Level detection	Level detection	Level detection

* All specifications are subject to change without notice.

Product Family

Ultrasonic Gas Flow Meter / Anemometer

Model Name	A200D1	A200M5	A240B1	A240M3	A500B1
					
Frequency (kHz)	200	200	240	240	500
Dimensions (mm)	OD 16.0 H 19.0	OD 18.2 H 8.5	OD 13.5 H 18.5	OD 18.2 H 7.0	OD 18.2 H 6.35
Directivity (full angle @-3 dB)	8 ± 2°	9 ± 2°	8 ± 2°	10 ± 2°	7 ± 2°
Operating Temperature (°C)	-25 ~ +55	-25 ~ +55	-30 ~ +60	-25 ~ +55	-25 ~ +55
Housing Material	PVDF	Elastomer	PVDF	Elastomer	Elastomer
ZFD (Zero Flow Drift)	< 1.0 ns	< 1.0 ns	< 1.0 ns	< 1.0 ns	< 1.0 ns
Major Applications	Gas flow meter	Gas flow meter	Anemometer	Gas flow meter	Gas flow meter

Dual-frequency Non-contact Ultrasonic Level Detection

Model Name	Y050A1	Y050T1	Y100T1
			
Frequency (kHz)	50/200	50/200	100/250
Dimensions (mm)	OD 56.0 H 51.0	OD 56.0 H 51.0	OD 29.0 H 30.0
Directivity (full angle @-3 dB)	10° (@50 kHz) 6° (@200 kHz)	10° (@50 kHz) 6° (@200 kHz)	10° (@100 kHz) 5° (@250 kHz)
Max. Sensing Range (meter)	12	12	4
Blind Zone (cm)	10	10	7
Housing Material	PVDF	PVDF	PVDF
Major Applications	Level detection	Level detection	Level detection

* All specifications are subject to change without notice.

Product Family

Level Detection through Liquid

Model Name	LPY1
	
Frequency (MHz)	1
Capacitance (@ 1 kHz) (pF)	1250
Echo Voltage (mV)	> 50
Maximum Driving Voltage (Vpp)	50
Dimensions (mm)	OD 25.0 H 8.0
Operating Temperature (°C)	-20 ~ 70
Storage Temperature (°C)	-30 ~ 80
Housing Material	Aluminum

Proximity Level Detection through Air

Model Name	BPY3
	
Frequency (kHz)	40
Capacitance (@ 1 kHz) (pF)	1800
Echo Voltage (mV)	> 200
Resonant Impedance (ohm)	< 2000
Dimensions (mm)	OD 14.4 H 6.8
Operating Temperature (°C)	-40 ~ 80
Storage Temperature (°C)	-10 ~ 80
Housing Material	Aluminum

Flow Meter for Liquids

Model Name	MPY1
	
Frequency (MHz)	1
Capacitance (@ 1 kHz) (pF)	1200
Sensitivity dB	-28 min
Beam Angle (-3 dB full angle)	5°
Operation Voltage (Vpp)	50 max
Operating Temperature (°C)	4 ~ 80
Storage Temperature (°C)	-10 ~ 80
Housing Material	PPS

* All specifications are subject to change without notice.

Unictron
Technologies Corp.

Embrace the Future: Shaping Tomorrow's Piezoceramics

By choosing Unictron, you're embracing a legacy of excellence that's continuously shaping the landscape of piezoceramics.

Here, we offer a glimpse into the vast possibilities Unictron – a world where innovation, quality, and customer-centricity converge.

Unfold the boundless opportunities that lie ahead as we embark on a journey that reshapes industries and empowers innovations.

The future of piezoceramics is here - a realm we're pioneering.

www.unictron.com

No. 83, Kewang Rd., Longtan Dist.,
Taoyuan City 325, Taiwan
Phone: +886-3-4072728
E-mail: p-sales@unictron.com