Unictron Technologies Corp.

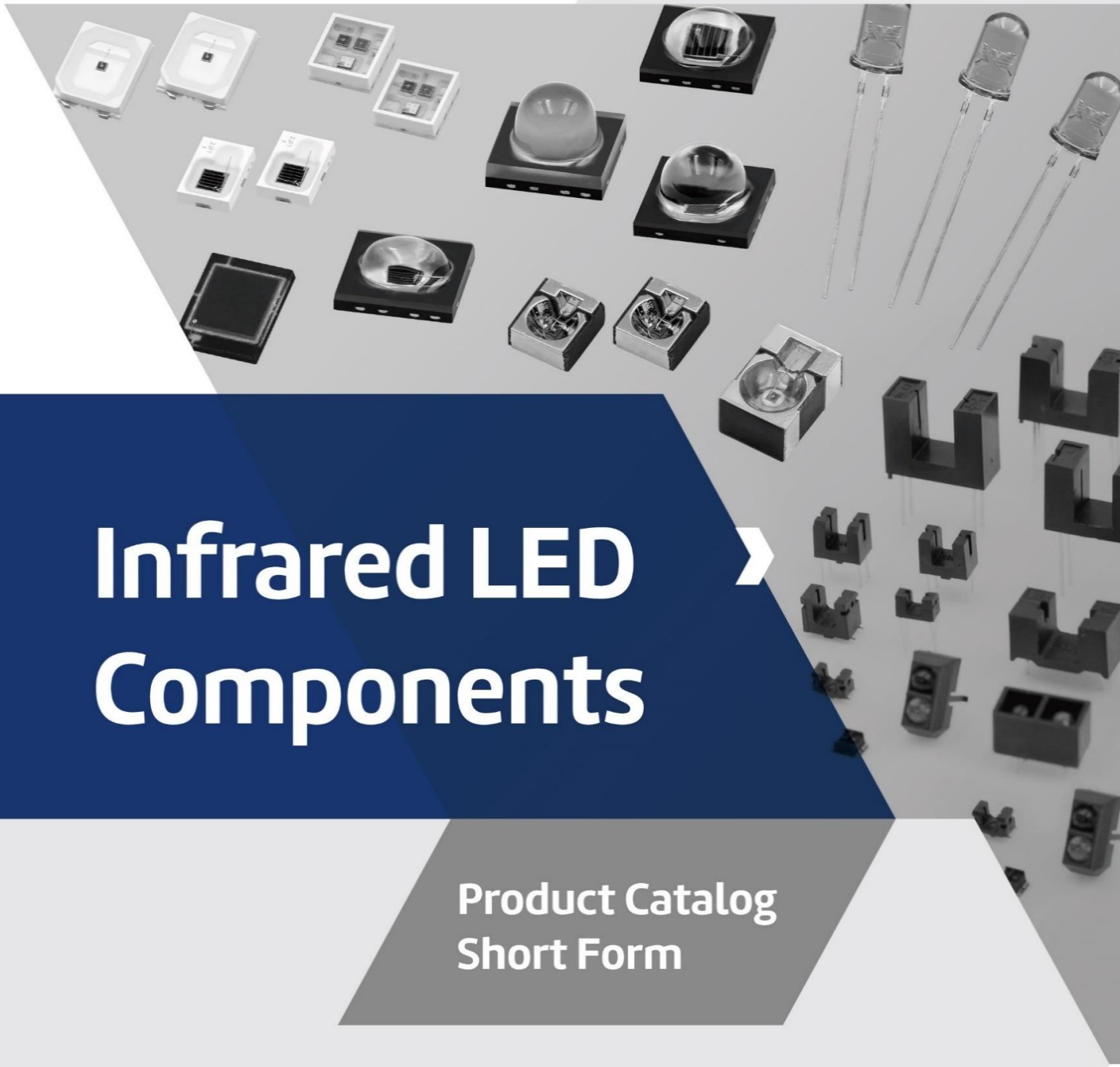

Infrared LED Components

Product Catalog Short Form

Sensing and Connecting

V.113.1

About Us

Unictron's Infrared team excels in developing high-performance, reliable optoelectronic products. With over 15 years of industry experience, we rapidly transform innovative ideas into real-world solutions, ensuring the highest standards in design and manufacturing. Our infrared components power a wide range of applications, including consumer electronics, industrial systems, and household appliances. We are committed to delivering exceptional quality and tailored solutions that meet our customers' unique needs, while maintaining rigorous quality control at every stage of production. Unictron—advancing infrared technology with a focus on innovation, speed, and reliability.

Product Portfolio

We provide a wide range of light-emitting and receiving discrete components to meet the diverse needs of the market, including infrared light-emitting diodes, high-sensitivity photodiodes and phototransistors, and high-reliability optical switches and sensors.

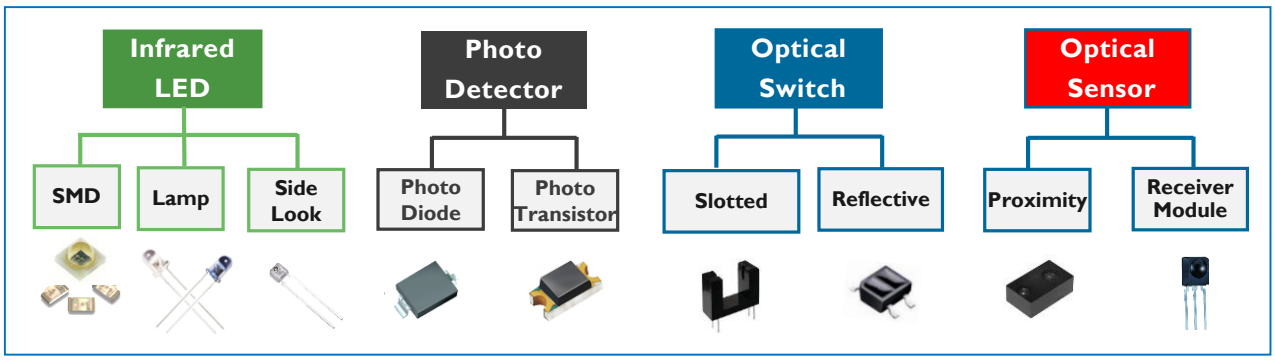

Infrared LED – SMD

Image	Part Number	Dimension LxWxH (mm)	VF Typ. (V)	VF Max. (V)	Ie_Min. (mw/sr)	Ie_Typ. (mw/sr)	Ie_Max. (mw/sr)	FOV (degree)	Wavelength λ (nm)
	HB-IR160806C-T4	1.7x0.8.x0.6	1.2	-	0.4	-	1.2	140	940
	HB-IR321619C-T2	3.2x1.6x1.85	1.2	1.5	1	3.0	-	20	940
	HC-IR352819C-T2	3.5x2.8x1.9	1.2	1.6	1	-	3.5	120	940
	HB-IRRG1816CW-T4	1.8x1.6x0.6	-	-	-	-	-	135	530, 660, 940
	HB-IR201211C-T3	2.0x1.25x1.1	1.2	1.5	0.2	0.8	-	120	940

Infrared LED – LAMP

Image	Part Number	Diameter Φ (mm)	Height (mm)	VF Typ. (V)	VF Max. (V)	Ie_Min. (mw/sr)	Ie Typ. (mw/sr)	Ie_Max. (mw/sr)	FOV (degree)	Wavelength λ (nm)
	HL-IR034	3.0	5.2	1.2	1.5	4.0	12.0	-	40	940
	HL-IR034C	3.0	5.2	1.2	1.5	4.0	5.6	-	35	940
	HL-IR054-10	5.0	8.6	1.2	1.5	15.3	23.5	-	15	940
	HL-IR0544	4.7	6.0	1.4	1.5	4.0	14.0	-	60	940

Infrared LED – Side Look

Image	Part Number	Dimension LxWxH (mm)	VF Typ. (V)	VF Max. (V)	Ie_Min. (uA)	Ie_Typ. (uA)	Ie_Max. (uA)	FOV (degree)	Wavelength λ (nm)
	HS-IR452357C	4.5x2.25x5.7	1.2	1.5	143	-	-	40	940
	HS-IR462545C	4.6x2.5x4.5	1.2	1.5	306	-	-	40	940
	HS-IR292940C	2.9x2.9x4.0	1.2	1.5	465	-	-	25	940

Infrared LED – High Power

* Sample will be ready by Q2, 2025

Image	Part Number	Dimension LxWxH (mm)	VF Typ. (V)	VF Max. (V)	Ie_Min. (mW/sr)	Ie_Typ. (mW/sr)	Ie_Max. (mW/sr)	FOV (degree)	Wavelength λ (nm)
	HC-HIR353533C-G30-060-T1	3.5*3.5*3.05	1.85	2.80	500	-	1100	60	850
	HC-HIR353525C-G38-090-T1	3.5*3.5*2.35	1.70	2.50	250	-	500	90	850
	HC-HIR383822C-21G38S-080-T1	3.8*3.8*2.1	1.70	2.50	300	-	600	100	850
	HC-HIR383823C-080-4713*	3.8*3.8*2.29	1.75	2.05	280	-	560	80	850
	HC-HIR383815C-150-4714*	3.8*3.8*1.51	1.75	2.05	112	--	224	150	850
	HC-HIR383823C-090-4715*	3.8*3.8*2.29	1.50	1.80	160	-	500	90	850
	HC-HIR383827C-050-4717*	3.8*3.8*2.66	3.05	3.50	900	-	1400	50	850
	HC-IR383829C-050-4728*	3.8*3.8*2.90	2.65	3.50	900	-	1400	50	940
	HC-IR383815C-1315-47278*	3.8*3.8*1.49	2.65	3.50	200	-	300	130*155	940
	HC-HIR383815C-1310-47167*	3.8*3.8*1.53	1.60	1.95	200	-	350	130*110	850

Silicon Detector

Photo Transistor – SMD

Image	Part Number	Dimension LxWxH (mm)	BVceo Min. (V)	Vce(sat) Max. (V)	Ic(on) Min.(mA)	Ic(on) Typ.(mA)	Ic(on) Max.(mA)	Rise Time Typ.(us)	Fall Time Typ.(us)	Sensitivity λ (nm)
	HB-PT160806B-T4	1.7x0.8x0.6	30	0.4	0.27	-	1.0	15	15	940
	HB-PT321619B-T2	3.2x1.6x1.85	30	0.4	-	1.0	-	20	20	940
	HB-PT321619C-T2	3.2x1.6x1.85	30	0.4	-	1.0	-	20	20	940
	HB-PT352819C-T2	3.5x2.8x1.9	30	0.4	2	2.3	10.0	15	15	940
	HB-PT201211B-T3	2.0x1.25x1.1	30	0.4	0.3	1.0	-	15	15	940
	HB-PT201211C-T3	2.0x1.25x1.1	30	0.4	0.3	1.0	-	15	15	940

Photo Transistor – LAMP

Image	Part Number	Diameter Φ (mm)	Height (mm)	BVceo Min. (V)	Vce(sat) Max. (V)	Ic(on) Min.(mA)	Ic(on) Typ.(mA)	Ic(on) Max.(mA)	Rise Time Typ.(us)	Fall Time Typ.(us)	Sensitivity λ (nm)
	HL-PT034B	3.0	5.2	30	0.4	0.95	-	4.9	15	15	940
	HL-PT054B	5.0	8.6	30	0.4	3.1	5.0	6.8	15	15	940
	HL-PT054C	5.0	8.6	30	0.4	0.7	-	-	15	15	940

Photo Transistor – Side Look

Image	Part Number	Dimension LxWxH (mm)	BVceo Min. (V)	Vce(sat) Max. (V)	Ic(on) Min.(mA)	Ic(on) Typ.(mA)	Ic(on) Max.(mA)	Rise Time Typ.(us)	Fall Time Typ.(us)	Sensitivity λ (nm)
	HS-PT452357B	4.5x2.25x5.7	30	0.4	0.86	-	-	15	15	940
	HS-PT452357C	4.5x2.25x5.7	30	0.4	0.86	-	-	15	15	940
	HS-PT462545B	4.6x2.5x4.5	30	0.4	0.51	-	3.4	15	15	940
	HS-PT462545C	4.6x2.5x4.5	30	0.4	0.51	-	3.4	15	15	940

Photo Diode – SMD

Image	Part Number	Dimension LxWxH (mm)	V_{BR} Min. (V)	V_{BR} Typ. (V)	I_L Min.(uA)	I_L Typ.(uA)	I_L Max.(uA)	Rise Time Typ.(ns)	Fall Time Typ.(ns)	Sensitivity λ (nm)
	HB-PD321511B-T2	3.2x1.5x1.1	32	170	-	6.5	-	10.0	10.0	940
	HB-PD321511C-T2	3.2x1.5x1.1	32	170	-	6.5	-	10.0	10.0	940
	HA-PD443912B-T3	4.4x3.9x1.2	32	170	-	20	-	10.0	10.0	940
	HA-PD443912C-T3	4.4x3.9x1.2	32	170	-	20	-	10.0	10.0	940
	HB-PD322710C1-T3	3.2x2.7x1.0	32	170	-	6.5	-	10.0	10.0	940

Photo Diode – Side Look

Image		Part Number	Dimension LxWxH (mm)	V_{BR} Min. (V)	V_{BR} Max. (V)	I_L Min.(uA)	I_L Typ.(uA)	I_L Max.(uA)	Rise Time Typ.(ns)	Fall Time Typ.(ns)	Sensitivity λ (nm)
		HS-PD483866B	4.8x3.8x6.6	32	170	15	25	-	50.0	50.0	940
		HS-PD483866C	4.8x3.8x6.6	32	170	15	25	-	50.0	50.0	940
		HS-PD522776B	5.2x2.7x7.6	32	170	15	25	-	50.0	50.0	940
		HS-PD522776C	5.2x2.7x7.6	32	170	15	25	-	50.0	50.0	940
		HS-PD344252B-S60	3.4x4.2x5.2	32	150.0	-	15	-	50	50.0	940
		HS-PD344252B-S90	3.4x4.2x5.2	32	150.0	-	25	-	50	50.0	940

Optical Switch

Photointerrupter – ITR Reflective Type

Image	Part Number	Type	Dimension LxWxH (mm)	V_F min. (V)	V_F max. (V)	Distance max. (mm)	Photo Current (min)
	OS040030RD40	SMD	4.0x3.0x2.0	1.2	1.4	4	60 (~450)uA
	OS034027RD08	SMD	3.4x2.7x1.6	1.2	1.5	0.6~0.8	200 (~920)uA
	OS020016RD60	SMD	2.0x1.6x0.75	1.2	1.5	3~6	0.8 (1.0) mA
	OS032027RD08	SMD	3.2x2.7x1.5	1.2	1.6	0.6~0.8	315(~2255)uA
	OS064049RD28	Through hole	6.4x4.9x6.5	1.2	1.5	2.6~2.8	0.6mA
	OS087047RD28	Through hole	8.7x4.7x5.9	1.2	1.5	2.6~2.8	0.2mA
	OS087047RD29/B07	Through hole	8.7x4.7x5.9	1.2	1.5	2.6~2.9	0.2mA
	OS100056RD28	Through hole	10.0x5.6x5.4	1.2	1.5	2.6~2.8	0.1mA
	OS106056RD28	Through-hole	10.6x5.6x5.9	1.2	1.5	2.6~2.8	0.5 (~20mA)

Photointerrupter – ITR Slotted Type

Image	Part Number	Dimension LxWxH (mm)	Gap (mm)	V_F min. (V)	V_F max. (V)	Photo Current (min)
	OS148060TG50	14.8x6.01x8.0	5.0	1.2	1.5	0.65 (~15mA)
	OS0495260TG20	4.95x2.6x3.3	2.0	1.2	1.5	0.18 (~1.6 mA)
	OS0470270TG20	4.7x2.7x3.0	2.0	1.2	1.5	0.1 (~1.6mA)
	OS0640420TG30	6.4x4.2x5.4	3.0	1.2	1.5	0.5 (~4.8mA)
	OS130060TG50	13x6.0x10	5.0	1.2	1.5	0.5mA
	OS128064TG52	12.8x6.4x6.9	5.2	1.2	1.5	0.5mA
	OS140060TG50	14x6.0x10.0	5.0	1.2	1.6	0.5mA
	OS140060TG60	14x6.0x11.6	6.0	1.2	1.6	0.5mA
	OS075028TG50	7.5x2.8x6.3	5.0	1.2	1.5	0.2mA (~0.95mA)
	OS064042TG30	6.4x4.2x5.4	3.0	1.2	1.5	0.2mA (~5mA)

Proximity Sensor

Image	Part Number	Dimension LxWxH (mm)	Type	Operation Voltage (V)	I_2C Bus Voltage (V)	LED Wavelengthλ (nm)	LED Pulse Current (mA)	VCSEL Wavelength λ(nm)	VCSEL Pulse Current(mA)	Output Resolution(bit)
	HB-APM402414BL-T1	3.94x2.36x1.35	APM	2.5~3.6	1.8~3.6	850	10~215	NA	NA	16
	HB-APM402414BV-T1	3.94x2.36x1.35	APM	2.5~3.6	1.8~3.6	NA	NA	940	10~25/ 100~215	16
	HB-APS402414BL-T1	3.94x2.36x1.35	APS	2.5~5.0	1.8~5.0	850	5~125	NA	NA	16
	HB-APS402414BV-T1	3.94x2.36x1.35	APS	2.5~5.0	1.8~5.0	NA	NA	940	5~12.5/ 50~125	16

Infrared Module – Through Hole

Image	Part Number	Dimension LxWxH (mm)	Type	Max. Range Typ.(M)	Operation Voltage (V)	Dissipative Current Typ.(mA)	Carrier Freq. (KHz)
	HRM-Z4AN81	6.0x6.9x5.6	Through Hole	15	2.7 ~5.0	0.48	38
	HRM-Z4QN81	6.0x6.9x5.6	Through Hole	25	2.7~5.5	0.26	38
	HRM-Z4S2H81	6.0x6.9x5.6	Through Hole	20	2.7~5.5	0.4	38

Infrared Module – SMD

Image	Part Number	Dimension LxWxH (mm)	Type	Max. Range Typ.(M)	Operation Voltage (V)	Dissipative Current Typ.(mA)	Carrier Freq. (KHz)
	HRM--Z3B2N88P	6.8x3.1x3.2	SMD	24	2.7~5.5	0.22	38
	HRM-Z3B4N88P	6.8x3.1x3.2	SMD	20	2.7~5.5	0.22	38
	HRM-Z3BN88P(LXM)	6.8x3.1x3.2	SMD	20	2.7~5.5	0.26	38
	HRM-Z3BN88P	6.8x3.1x3.2	SMD	20	2.7~5.5	0.26	38
	HRM-Z3EN88P	6.8x3.1x3.2	SMD	26	2.7~5.5	0.26	38
	HRM-Z3QN88P	6.8x3.1x3.2	SMD	23	2.7~5.5	0.26	38
	HRM-Z7B8E87	5.0x4.0x4.0	SMD	20	2.7~5.5	0.22	38
	HRM-Z7QE87	5.0x4.0x4.0	SMD	23	2.7~5.5	0.26	38
	HRM-5042-B8E-Z2	5.0x4.2x4.5	SMD	20	2.7~5.5	0.22	38
	HRM-5042-EE-Z2	5.0x4.2x4.5	SMD	26	2.7~5.5	0.26	38
	HRM-5042-P3E-Z2	5.0x4.2x4.5	SMD	20	2.7~5.5	0.4	38
	HRM-5042-PA-Z2	5.0x4.2x4.5	SMD	12	2.7~5.5	0.42	38
	HRM-5042-QN-Z2	5.0x4.2x4.5	SMD	25	2.7~5.5	0.26	38
	HRM-5042-TH-Z2	5.0x4.2x4.5	SMD	20	2.7~5.5	0.28	38

Notice

1) Intended Use:
This document introduces UNICTRON products. Please verify the latest specifications or datasheets before use.

2) General Use and Specific Applications:
UNICTRON products are designed for general electronic equipment (e.g., audio-visual, office automation, telecommunications, home appliances, etc.) or as specified in datasheets.
Contact a UNICTRON sales representative before using UNICTRON products in equipment requiring high reliability (e.g., medical, transportation, nuclear power, automotive, etc., referred to as **Specific Applications**).
UNICTRON assumes no liability for damages arising from the use of products in Specific Applications unless agreed upon in writing.

3) Safety Measures:
Electronic components may fail or malfunction. It is your responsibility to implement adequate safety measures, including fail-safe design, to prevent injury or property damage.

4) Application and Usage:
Information, including application circuit examples, is provided for standard use and does not guarantee product performance in actual equipment. You are responsible for verifying and using this information. UNICTRON is not liable for damages arising from its use.

5) Export Compliance:
When exporting UNICTRON products, comply with all applicable export laws and regulations.

6) Intellectual Property:
The technical information in this document is for example purposes and does not guarantee freedom from third-party intellectual property infringement. UNICTRON does not grant any express or implied licenses.

7) Reproduction Restrictions:
No part of this document may be reproduced without prior written consent from UNICTRON.

8) Information Updates:
Information is current as of the date of publication and is subject to change without notice. Confirm the latest details with a UNICTRON sales representative before purchasing or using products.

9) Disclaimer of Errors:
UNICTRON does not guarantee this document is error-free and is not liable for any resulting damages or losses.

10) Effective Date:
Information is current as of September 2nd, 2024.

Sensing & Connecting

www.unictron.com

Unictron Technologies Corp.