Features

- *150W* Surface Mount
- *Bi-Directional* ***TVS*** for ESD Protection Diode –

  Stand-off voltage: *3.3V*

1. Small body outline dimensions
2. Low body height
3. Low leakage
4. Response time is typically < 1ns
5. ESD rating of class 3 (> 16kV) per human body Model
6. IEC61000-4-2 level 4 ESD protection
7. IEC61000-4-4 level 4 EFT protection
8. Lead-free parts meet environmental standards Of MIL-STD-19500 /228
9. HF product

Mechanical

1. Epoxy : UL94-V0 rated flame retardant
2. Case : Molded plastic, SOD-923
3. Terminals :Plated terminals, solderable per MIL-STD-750, Method 2026
4. Mounting Position : Any
5. Weight : Approximated 0.00044 gram

Package outline

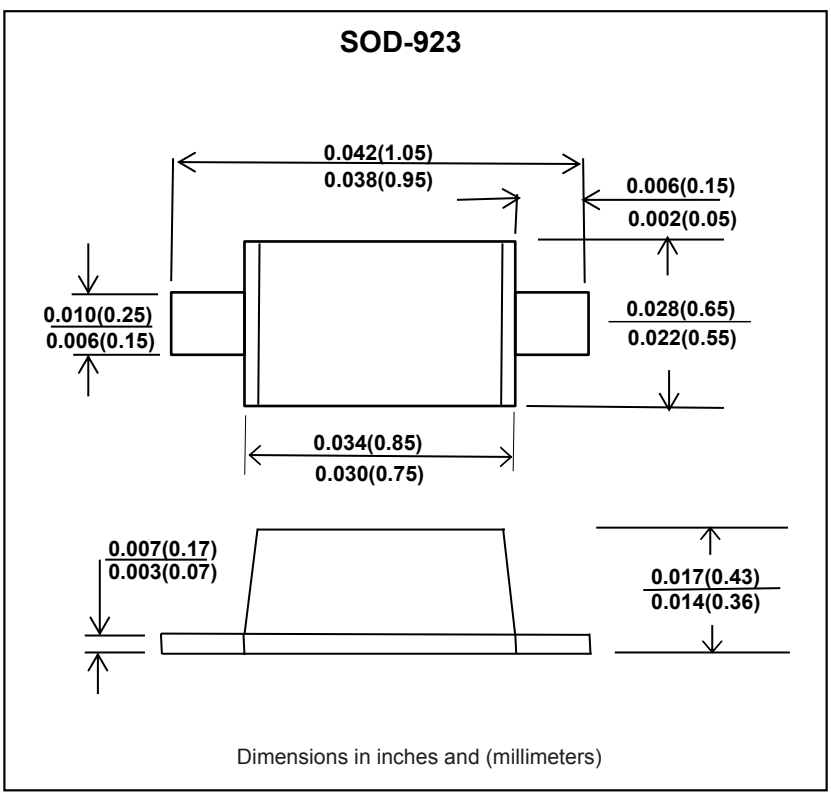

Ordering Information

UPDFB 033 250 – SOD923 (–H)
(1) (2) (3) (4) (5)

(1) Product Series
UPDFB : TVS Diode, Bi-direction

(2) Reverse Working Voltage
033 : 3.3V

(3) Capacitance
150 : 15pF

(4) Package
SOD923: SOD-923

(5) Halogen Free or not
H : Halogen Free Product

Maximum Ratings

(at T =25℃ unless otherwise noted)

PARAMETER	CONDITIONS	SYMBOL	VALUE	UNIT
Peak power dissipation	tp=8/20us	P	150	W
IEC61000-4-2(ESD)	air discharge		±30	KV
	contact discharge		±30	
IEC61000-4-4(EFT)			40	A
ESD voltage	per human body model		16	KV
Lead solder temperature maximum 10 second		TL	260	℃
Operating temperature		T op	-40~+125	℃
Maximum junction temperature		TJ	150	℃
Storage temperature		T STG	-55~+125	℃

Electrical Characteristcs

(at T =25℃ unless otherwise noted)

Part No.	V_{RWM}	I(uA)R@V_{RWM}	V_{BR}(V)@IT (Note 1)		IT	V_C(V) (Note1)@IPP=5.0A*	V_C(V) (Note1)@Max IPP*	I_{PP} (A)*	P_{PK} (W)*	C(pF)
		Max.	Min.	Max.	(mA)	Typ.	Max.	Max.	Max.	Typ.
UPDFB033250	3.3	1.0	5.0	7.0	1.0	8.4	14.1	11.2	158	25

Note *Surge current waveform per Figure 1.
1. VBR is measured with a pulse test current IT at an ambient temperature of 25℃

Rating and Characteristic Curves

FIG.1-PULSE WAVEFORM

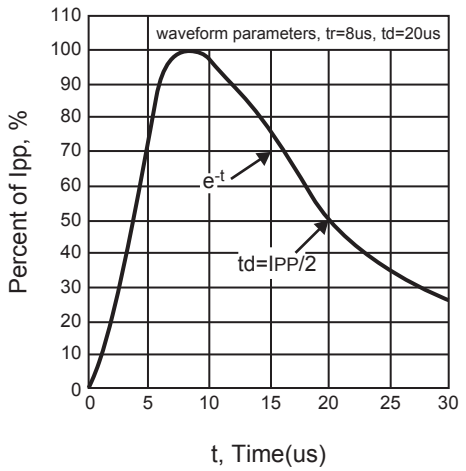

FIG.2-POWER RATING CURVE

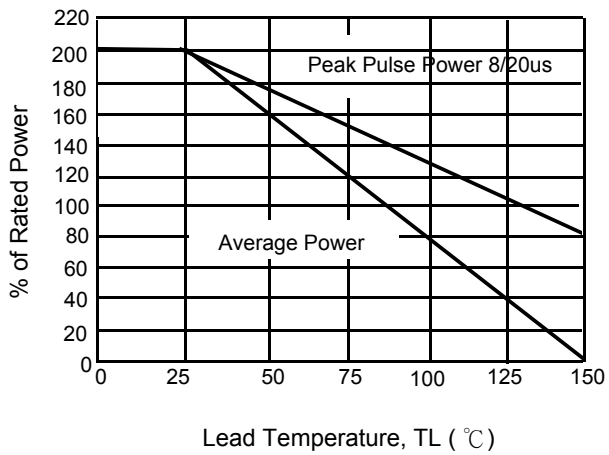

Typical Performance Characteristics

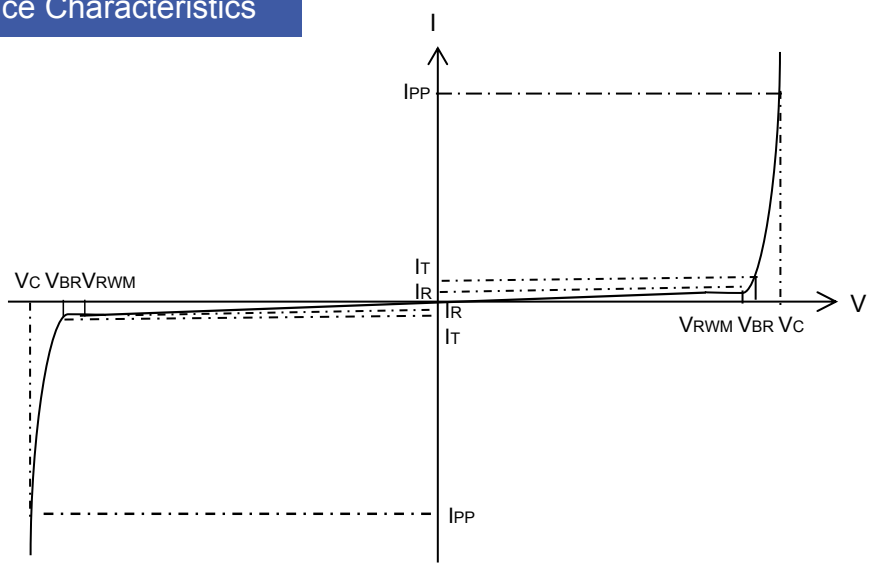

Bi-Directional TVS

V_C: Calmping Voltage @ I_{PP}
I_{PP}: Maximum Reverse Peak Pulse Current
V_{RWM} : Working Peak Reverse Voltage
I_R: Maximum Reverse Leakage Current @V_{RWM}
V_{BR}: Breakdown Voltage @I_T
I_T: Test Current
P_{PK}: Peak Power Dissipation
C: Max. Capacitance @V_R = 0 and f = 1MHz

Pin Configuration & Marking

Pin	Simplified outline	Symbol
Bi-Directional		

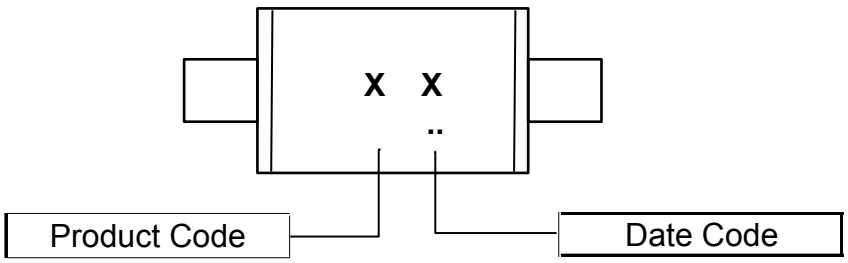

Type Number	Product Code
UPDFB033250	B

Solder Pad Layout

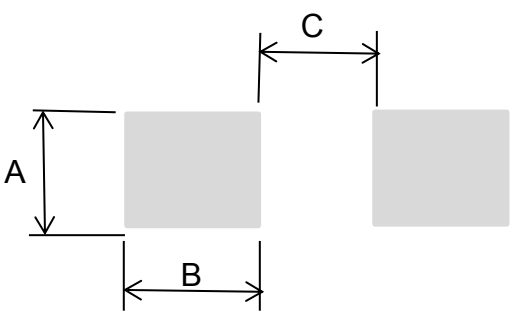

Unit: inch(mm)

PACKAGE	A	B	C
SOD-923	0.016(0.4)	0.012(0.3)	0.024(0.6)

Standard Package

Package	Tape Width (mm)	Pitch		Reel Size		Devices Per Reel and Minimum Order Quantity
		mm	(inch)	mm	(inch)	
SOD-923	8	2.0 ± 0.1	(.079 ± .004)	178	(7)	8,000

Tape and Reel Dimensions

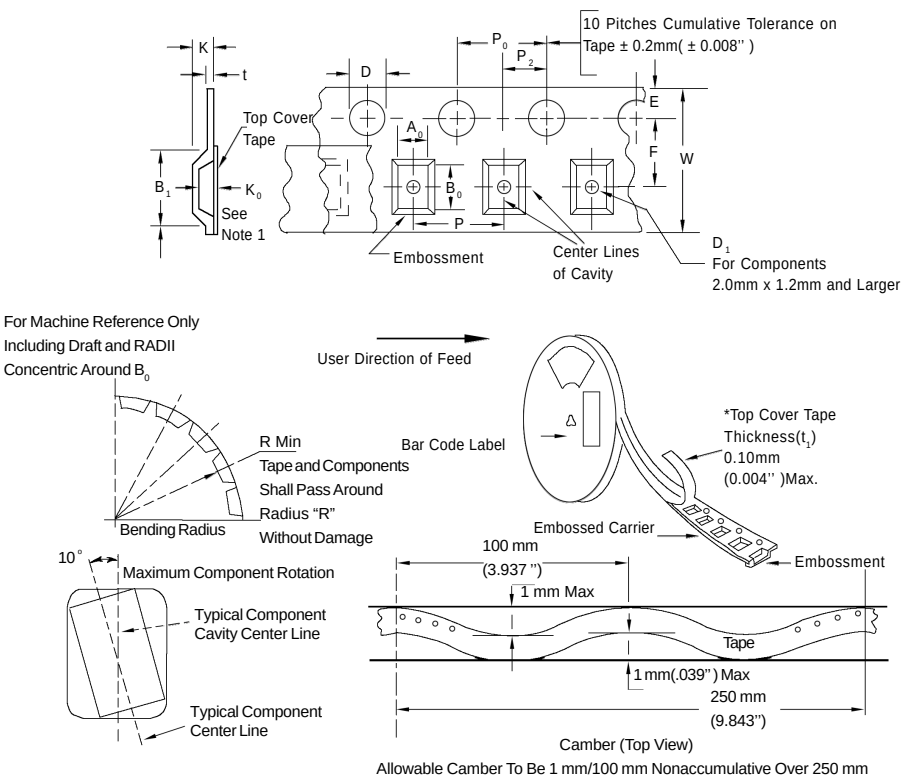

DIMENSIONS

Tape Size	B_1 Max	D	D_1	E	F	K	P_0	P_2	RMin	TMax	WMax
8mm	4.55mm (.179")	1.5+0.1mm - 0.0	10Min (.039")	1.75±0.1mm (.069±.004)	3.5±0.05mm (.138±.002")	2.4mmMax (.094")	4.0±0.1mm (.157±.004")	2.0±0.1mm (.079±.002")	25mm (.98")	0.6mm (.024")	8.3mm (.327")

Metric dimensions govern - English are in parentheses for reference only.

NOTE 1: A_0, B_0, and K_0 are determined by component size. The clearance between the components and the cavity must be within .05 mm min. to.50 mm max.,

NOTE 2: the component cannot rotate more than 10 ° within the determined cavity.

NOTE 3: If B_1 exceeds 4.2 mm (.165") for 8 mm embossed tape, the tape may not feed through all tape feeders.

NOTE 4: Measure for 50+/-10 empty pockets at the tape leader using the ruler provided on the machine.

NOTE 5: At the end of counter units the handler will seal 110+/-10 empty pockets.

Tape and Reel Dimensions

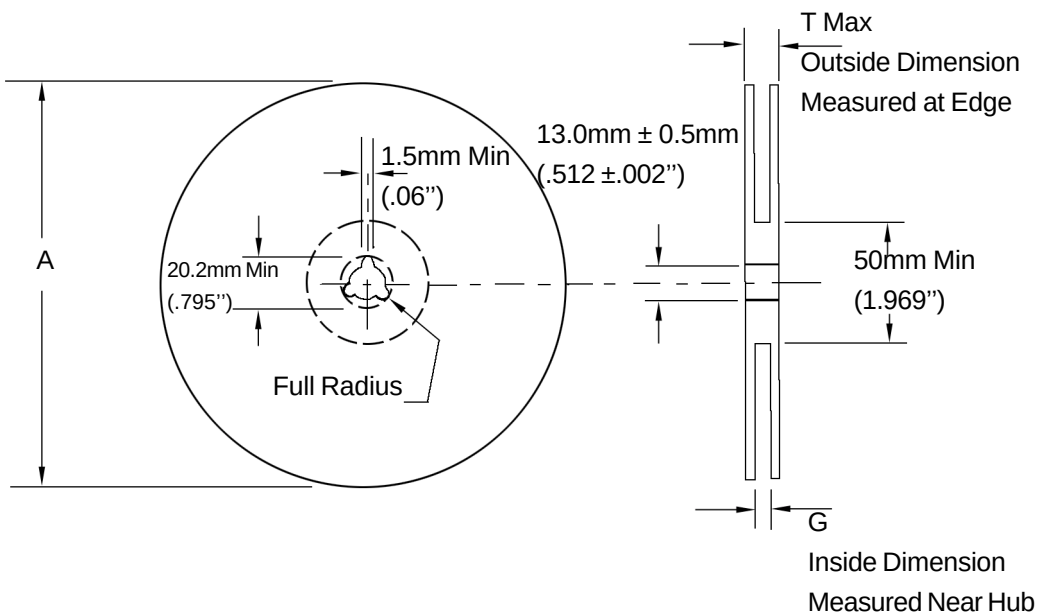

Size	A Max	G	T Max
8 mm	178.0mm (7.0")	8.4mm+1.5mm, -0.0 (.33"+.039", -0.00)	10.9mm (.43")

Suggested Thermal Profiles for Solder Processes

1. Storage environment : Temperature= 5℃ ~ 40℃ Humidity =55%±25%
2. Reflow soldering of surface-mount devices.

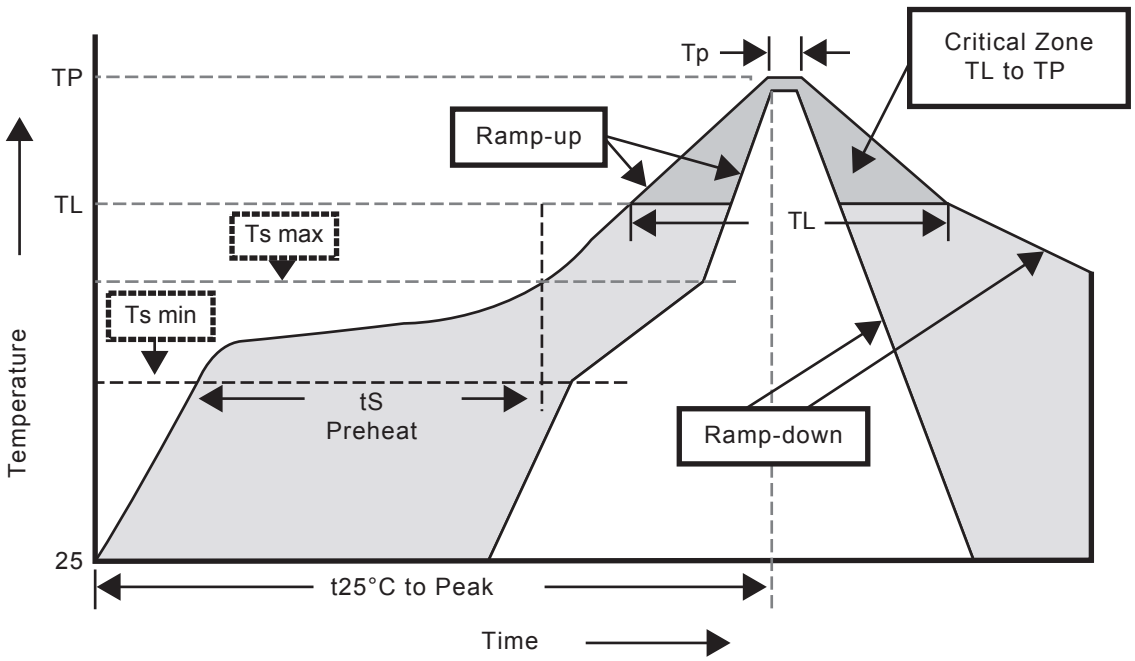

3.Reflow soldering

Profile Feature	Soldering Condition
Average ramp-up rate(T_L to T_P)	<3℃/sec
Preheat -Temperature Min(Tsmin) -Temperature Max(Tsmax) -Time(min to max)(ts)	 150℃ 200℃ 60~120/sec
Tsmax to T_L -Ramp-up Rate	 <3℃/sec
Time maintained above: -Temperature(T_L) -Time(t_L)	 217℃ 60~260sec
Peak Temperature(Tp)	255℃-0/+5℃
Time within 5℃ of actual Peak Temperature(tp)	10~30sec
Ramp-down Rate	<6℃/sec
Time 25℃ to Peak Temperature	<6minutes